Ser II

INSTRUCTION BOOK and SPARE PARTS LIST

THE HOWARD PATENT

"GEM"

ROTARY HOE

ROTARY HOES LIMITED
EAST HORNDON . ESSEX . ENGLAND

HANDBOOK CORRECTIONS AND ADDITIONS

Plate	Correction on	Part No.	Name	Correction/Addition
5	Drawing and list	G-330	Loose hub gear shim	Not required from M/c No. G8000 onwards
5	,, ,,	S-1434	Roadwheel shaft splitpin —R.H.—1 off	Should be S-436 & 1 off
5	,, ,,	S-1434	Roadwheel shaft splitpin —L.H.—1 off	Add to handbook
5	,, ,,	G-342	Bull pinion shim	These shims are obsolete all washers spacers & layshaft shims now uniform thickness; i.e.— —G-1031—4 off
5	,, ,,	G-348	Layshaft bearing distance piece	
5	,, ,,	G-1032	Bearing shim	
5	,, ,,	G-343	Layshaft bearing housing	Now obsolete. Cast integral with side plate
5	,, ,,	G-344	Layshaft bearing cap	
5	,, ,,	G-345	Layshaft bearing cap gasket	
5	,, ,,	S-1223	Layshaft bearing cap setscrew	Delete cancelled design
5	,,	S-1373	Layshaft bearing cap spring washers	Delete cancelled design
5	List	G-346	Layshaft	Should be G-350
5	Drawing and list	S-1436	Layshaft splitpin	Should be S-1416
5	,, ,,	S-1233	Roadwheel shaft bearing cap setscrews. R.H.	Delete cancelled design
5	,, ,,	S-1374	Roadwheel shaft bearing cap springwashers. R.H.	Delete cancelled design
5	,, ,,	G-469	Gear box side plate	Should be G-471
5	List	S-1223	Gear box side plate setscrews	Should be 14 off not 1 off
5	Drawing and list	G-478	Gear box gasket	Should be one off, not 3 off, note: from M/c No. 3967 the overall width of box has been increased by $\frac{1}{16}$ as temporary measure this has been accomplished by using 3 gaskets cemented together
5	List	G-486	Gear box side plate dowels	Should read 2 off, not 1 off
5	Drawing	G-1015	Reverse gear selector crank	Drawn on wrong side of lug
5	,,	S-1356	Reverse gear pin nut—1 off	Should read:—reverse gear tumbler arm pin—1 off. Clutch shaft pinion nut—1 off
5	List and drawing	S-1422	Reverse gear pin splitpin	Should be S-1424
5A	,, ,,	S-1580	Clutch shaft keys	Now replaced by G-364 for bevel pinion and G-242 for clutch
5A	,, ,,	S-1436	Clutch nut splitpin	Should read S-1416
5A	List	G-263	Clutch springs	Subsequent to and inclusive of M/c No. 9240 clutches are fitted with 3 springs (instead of 4 as formerly) and in future will be listed under G-260

Plate	Correction on	Part No.	Name	Correction/Addition
5A	Drawing and list	G-286	Air cleaner support bracket	Now obsolete
5A	,, ,,	G-293	Clutch shaft bear'g housg.	Not required, bearing housing now cast integrate with box
5A	,, ,,	S-1313	Clutch shaft bearing housing nuts	
5A	,, ,,	S-1373	Clutch shaft bearing housing spring washers	
5A	,, ,,	S-1266	Clutch shaft bearing housing bolts	Not required
5A	,, ,,	S-1223	Layshaft bearing stop screws	Should read S-1222
5A	,, ,,	G-355	Layshaft bearing stop gasket	Not required make oil tight by painting joint
5A	,, ,,	G-357	Layshaft bearing shim L.H.	Not now used replaced by a series of washers of varying thickness inserted as required to ensure that end float in the shaft is from .000″—.0015″
5A	,, ,,	G-367	Bevel pinion nut	Should read S-1356
5A	List	G-402	Roadwheel shaft bearing stop gasket. L.H.	Should be 3 off, not 2 off
5A	Drawing and list	G-461	Jackshaft oilseal disc	Not used, now replaced by a series of 13; 14; 15; 16; 17; S.W.G. washers these are to be fitted as required to ensure a backlash of .010″ max. between crown wheel and pinion
5A	,, ,,	G-463	Oilseal disc for roadwheel	Not required, replaced by a series of .045″;.060″ and .075″ thick washers in order to limit shaft end float from .000″—.015″
5A	,, ,,	G-480	Gear box	Should be G-470
5A	,, ,,	S-1461	Gear box flange extension setscrews	Should be S-1212, 2 off not 3 off
5A	List	S-1372	Gear box flange extension spring washers	Should be 2 off, not 3 off
5A	,,	S-1214	Gear box to engine setscrews—8 off	Add to list
5A	,,	S-1372	Gear box to engine spring washers—8 off	Add to list
5A	Drawing and list	S-1395	Nut—L.H.	Should be S-1359 on drawing and be added to list
6	,, ,,	S-1432	Frame swivel bolt nut splitpin	Should be S-1434
6	,, ,,	S-1314	Handle bar slide nuts	Should be S-1324 (locknut)
6	,, ,,	S-1278	Handle bar slide pinching bolts	Should be S-1277
6	Drawing	G-152	Rotor and travel gear control arm	Show on drawing
6	Drawing and list	S-1421	Differential control rod splitpins	Should be S-1424
6	,, ,,	S-1411	Differential selector qudrant pin splitpins	Should be S-1413—2 off
6	,, ,,	S-1214	Handle bar positioning arm setscrew	Should be S-1252

Plate	Correction on	Part No.	Name	Correction/Addition
5A	Drawing and list	G-286	Air cleaner support bracket	Now obsolete
5A	,, ,,	G-293	Clutch shaft bear'g housg.	Not required, bearing housing now cast integrate with box
5A	,, ,,	S-1313	Clutch shaft bearing housing nuts	
5A	,, ,,	S-1373	Clutch shaft bearing housing spring washers	
5A	,, ,,	S-1266	Clutch shaft bearing housing bolts	Not required
5A	,, ,,	S-1223	Layshaft bearing stop screws	Should read S-1222
5A	,, ,,	G-355	Layshaft bearing stop gasket	Not required make oil tight by painting joint
5A	,, ,,	G-357	Layshaft bearing shim L.H.	Not now used replaced by a series of washers of varying thickness inserted as required to ensure that end float in the shaft is from .000″—.0015″
5A	,, ,,	G-367	Bevel pinion nut	Should read S-1356
5A	List	G-402	Roadwheel shaft bearing stop gasket. L.H.	Should be 3 off, not 2 off
5A	Drawing and list	G-461	Jackshaft oilseal disc	Not used, now replaced by a series of 13; 14; 15; 16; 17; S.W.G. washers these are to be fitted as required to ensure a backlash of .010″ max. between crown wheel and pinion
5A	,, ,,	G-463	Oilseal disc for roadwheel	Not required, replaced by a series of .045″;.060″ and .075″ thick washers in order to limit shaft end float from .000″—.015″
5A	,, ,,	G-480	Gear box	Should be G-470
5A	,, ,,	S-1461	Gear box flange extension setscrews	Should be S-1212, 2 off not 3 off
5A	List	S-1372	Gear box flange extension spring washers	Should be 2 off, not 3 off
5A	,,	S-1214	Gear box to engine setscrews—8 off	Add to list
5A	,,	S-1372	Gear box to engine spring washers—8 off	Add to list
5A	Drawing and list	S-1395	Nut—L.H.	Should be S-1359 on drawing and be added to list
6	,, ,,	S-1432	Frame swivel bolt nut splitpin	Should be S-1434
6	,, ,,	S-1314	Handle bar slide nuts	Should be S-1324 (locknut)
6	,, ,,	S-1278	Handle bar slide pinching bolts	Should be S-1277
6	Drawing	G-152	Rotor and travel gear control arm	Show on drawing
6	Drawing and list	S-1421	Differential control rod splitpins	Should be S-1424
6	,, ,,	S-1411	Differential selector qudrant pin splitpins	Should be S-1413—2 off
6	,, ,,	S-1214	Handle bar positioning arm setscrew	Should be S-1252

Plate	Correction on	Part No.	Name	Correction/Addition
6	Drawing and list	S-1372	Handle bar positioning arm spring washer	Should be S-1362
6	,, ,,	S-1234	Staytube setscrews	Should be S-1235
6		S-1334	Rotor rear shield clamping bolt nut	Asterisks to be placed by these part nos. and the covering note in in order to avoid confusion
6	List	S-1384	Rotor rear shield clamping bolt thackeray washer	
6		S-1411	Rotor rear shield clamping splitpin	
6	,,	S-1235	Rotor rear shield L.H. hinge bolt—1 off	Add to plate 6 of list
6	,,	S-1376	Rotor rear shield L.H. hinge bolt spring washer—1 off	Add to plate 6 of list
6	,,	G-667	Rotor depth control socket support to frame	Should be 1 off, not 2 off
6	Drawing and list	S-1252	Rotor depth control socket to support bolt	Should be S-1254
6	Drawing	G-699	Handlebar clutch hand lever rivet	Shown as a bolt should be a rivet
6	,,	G-704	Clutch hand lever adjusting link	Shown on drawing as G-700, should be G-704
6	Drawing and list	S-1312	Clutch hand lever adjusting link locknut	Delete, not now used
6	,, ,,	S-1411	Clutch hand lever adjusting link splitpin	Add to drawing and list
6	,, ,,	S-1214	Frame clutch arm pivot setscrew	Should read S-1254
6	List	G-772	Travel gear control arm; eye bolt	Replaced by G-774, which is untapped
6	Drawing and list	S-1333	Rotor and differential control arm eye bolt nut	Should be 2 off, not 1 off
6	,, ,,	G-1413	Travel gear control rod splitpin	Should be S-1422
6	List	S-1420	Throttle and trunnion and exhaust R.T. splitpins	Should be S-1411 and be 2 off
6	Drawing and list	S-1420	Rotor and travel gear hand lever spring splitpin	Should be S-1423—2 off
6	,, ,,	S-1413	Rotor gear control rod splitpin	Should be S-1422
6	,, ,,	S-1411	Throttle hand lever to throttle arm rod and splitpin	Should be S-1413—2 off
6	,, ,,	S-1214	Throttle hand control lever setscrew	Should be S-1252
6	,, ,,	S-1214	Frame throttle arm pivot setscrew	Should be S-1252
6	,, ,,	S-1422	Reverse gear arm trunnion nut splitpin	Should be S-1420
6	,, ,,	S-1324	Channel gear rod trunnion nuts—2 off	Add
6	,, ,,	S-1422	Throttle frame arm trunnion splitpin	Should be S-1411 on drawing add to list
6	,, ,,	S-1382	Throttle frame arm thackeray washer—1 off	Add to drawing and list
6	List	S-1233	Centre tube plug—1off	Add to list
7	,,	G-155	Rotor and travel gear control arm keys	Should read 3 off, not 2 off
7	Drawing and list	S-1424	Rotor gear selector block splitpin	Not now used
7	Drawing	S-1315	Starting handle pivot bolt nut	Shown on drawing as S-1352, should be S-1315 as on list

Plate	Correction on	Part No.	Name	Correction/Addition
7	Drawing and list	S-1324	Starting handle support bracket spring washer	Should be S-1374
7	,, ,,	S-1234	Jackshaft extension housing setscrews	Should read S-1225
7	,, ,,	S-1462	Chain box cover setscrews (standard)	Should be 7 off, not 6 off
7	,, ,,	S-1464	Chain box coverset screws (extra long)	Should be 4 off, not 7 off
7	List and drawing	S-1372	Chain box backplate to shield spring washers—1 off	Add to drawing and list
7	,, ,,	S-1312	Chainbox backplate to shield nuts—1 off	Add to drawing and list
7	,, ,,	S-1462	Chainbox backplate to shield setscrews—1 off	Add to drawing and list
7	,, ,,	S-1225	Chain skid locking setscrew	Should read S-1264
7	,, ,,	G-610	Rotor friction drive disc	In cases where machines are fitted with Ferodo linings in friction clutch, G-610 is replaced by the following: G-605 friction drive plate — 1 off, G-606 friction drive disc—1 off G-607 friction drive fibre rings (Ferodo) 2 off These units are supplied for spares purposes, with friction plates cemented to the disc
7	List	S-1235	Rotor rear shield hinge bolt	Should be 1 off, not 2 and marked R.H.
7	,,	S-1376	Rotor rear shield hinge bolt spring washer	Should be 1 off, not 2, marked R.H. and should be S-1374
7	Drawing and list	S-1464	Rotor bracket R.H. set-screws	Should be 2 off, for S-1464 and 3 off for S-1463 not 5 off
7	,, ,,	G-639	Rotor stub axle inner dust cover	This has been added as an additional dust seal on all machines, and those being reconditioned will be fitted with it
8	,, ,,	G-131	Roadwheel L.H.	Should read R.H.
8	,, ,,	G-132	Roadwheel R.H.	Should read L.H.
8	,, ,,	S-1462	Rotor depth control wheel cap nut oiling screw	Should be S-1461
8	,, ,,	S-1439	Rotor depth control pedestal splitpin	Should be S-1432
8	,, ,,	S.1350	Axle nut	Should be S-1327
9	,, ,,	G-950A	Mould board assembly	Should be G-952
9	,, ,,	S-1264	Skid bracket clamping bolt	Should be S-1254
9	,, ,,	S-1313	Skid clamping bolt nut	Should be S-1312
9	,, ,,	S-1373	Skid bracket spring washer	Delete not used
9	List	G-925	Power take-off bearing dust cover	Should be G-935
10	Drawing and list	S-1316	Gear box rear support lock nut	Should be S-1326
5A	,, ,,	G-239	Clutch shaft	Should be G-240
			B.J. LIST	
3	List	G-274A	Air cleaner gauze filter	should be 2 off, not 1 off

Plate	Correction	Part No.	Name	Correction/Addition
3	Drawing and list	G267	Support coil for P.T.C. hose—1 off	Not shown. Add to drawing and list (used with R.V.C. grade of hose only)
3	,, ,,	BJ-9135	Locknut in place of BJ-9103	These nuts are fitted in place of the respective springs where excessive vibration of the machine is evident. The jet-setting can then be locked. These nuts can be obtained on request
3	,, ,,	BJ-9134	Locknut in place of BJ-9109	
9		S-93/4	Power take-off housing oil screw	$\frac{1}{4}'' \times \frac{1}{2}''$ Round Head B.S.F.

DOUBLE ENDED SET SPANNERS

S 231/7	$\frac{1}{4}'' \times \frac{3}{16}''$
S 231/8	$\frac{3}{8}'' \times \frac{7}{16}''$
S 231/3	$\frac{5}{16}'' \times \frac{3}{8}''$
S 231/5	$\frac{7}{16}'' \times \frac{1}{2}''$
S 231/9	$\frac{5}{8}'' \times \frac{1}{2}''$
S 233	Adjustable spanner

BOX SPANNERS

S 234/1	$\frac{5}{8}''$ single ended
S 235/1	$\frac{5}{16}'' \times \frac{3}{8}''$ double ended
S 236/1	Tommy bar
S 242/1	Combination pliers
S 245	Screwdriver
S 238/2	Feeler gauge .008" and .010"
S 260/2	Oil can

SPARE PARTS

G 919	Rotor blade end flange bolts ...	2 off
S 1345	Rotor blade end flange bolt nuts	2 off
G 900A/R	Rotor blade, **right hand**	1 off
G 900A/L	Rotor blade, **left hand**	1 off
G 551/2	Rotor drive chain connecting link	1 off
G 591	Frame bolt	1 off
	One Blade Setting Bar	

Subject to alteration without notification

THE HOWARD PATENT

"GEM"

ROTARY HOE

INSTRUCTIONS ON

OPERATION
ADJUSTMENT
AND
LUBRICATION

ILLUSTRATED SPARE PARTS LIST

MANUFACTURED BY

ROTARY HOES LIMITED
EAST HORNDON . ESSEX . ENGLAND
Telephone: Herongate 361 *Telegraphic Address: "Rotovate, Brentwood"*

INDEX

NOTES ON CULTIVATION

SINCE the scope of operation is so extensive, and as soil tillage methods differ so greatly with various crops, climates and soil conditions, it is only possible to deal briefly with this aspect. However, the following hints should enable the user to obtain the best results from the machine.

Virgin soil or land tightly bound together with grass or roots is best cultivated by first working shallow to break up the surface. The required depth may then be reached on successive runs over the ground.

The low gear must be used when cultivating ground that is very hard or covered with heavy growths. Second gear is used for all ordinary cultivation, and top gear for light cultivation. Always work on the highest gear that will produce the quality of tilth required. Always use top gear for running the machine between work. A depth control skid, or wheel, is fitted and by moving this up and down the depth of work is controlled in $\frac{3}{4}''$ stages from $\frac{3}{4}''$ to about 8″ in depth.

When cultivating a ploughed field, the Rotary Hoe should be run across the furrows—not along them. This will ensure complete cultivation.

On hilly ground always run the Rotary Hoe around the contour, working from top to the bottom of the hill. After the first cut, one road wheel can be run in the soil just cut up and any tendency to slip will be obviated by the wheel coming against a wall of uncut soil.

If the land is exceptionally light special extension rims may be supplied to prevent the machine sinking in.

Do not overtax the power of the machine—far better results will be obtained from working in easy stages rather than by forcing the machine to do work in excess of its horsepower.

SPECIFICATION

Engine

Single cylinder side valve (667 cc.)

Bore and stroke

$3\frac{1}{2}$ dia. $\times 4\frac{1}{4}$ stroke.

Engine speed

1500—1600 r.p.m.

Fuel tank

Petrol and Oil tank built as one unit with separate compartments. Petrol capacity $1\frac{1}{2}$ gallons. Oil capacity 3 pints.

Clutch

High duty single dry plate type.

Gear box

Three speed and reverse transmission by hardened gears running in oil. All shafts mounted on ball bearings. Differential gear for easy turning automatically locked when Rotor is engaged.

Speeds

1st gear—·66 m.p.h. 2nd gear—1.03 m.p.h. 3rd gear—1.40 m.p.h. Reverse gear—1.40 m.p.h.

Rotor

Speed 144 r.p.m. 18″ dia.

Power take-off pulley

10″ dia. 4″ face. 416 r.p.m. 1100 ft. per min.

Overall dimensions of machine

Length 6′ 6″. Width 2′ 1″

Weight

$5\frac{1}{4}$ cwt. approximately.

Above particulars are for Standard 20″ Machine.

INTRODUCTION

THIS INSTRUCTION BOOK has been compiled to instruct the operator of a Rotary Hoe Gem in its operation, lubrication and maintenance. It is not intended that this book should cover all repairs since the major repair tasks are dealt with in a Repair manual issued to all Service agents in order that they may be competent to service and overhaul the machine completely. If the Instruction book is read and the instructions followed, the Gem will give long and trouble-free service.

NOTES FOR OPERATOR

(1) The importance of regular and correct lubrication cannot be over-emphasized and particular attention must be paid to the Oiling chart (inside back cover).

Before starting up, ensure that the oil tap fitted under the oil compartment of the petrol and oil tank is turned on. ***This tap should only be turned off if the machine is laid up for a lengthy period to prevent the crankcase from being flooded with oil.***

(2) ***Air cleaner and oil filter maintenance is of paramount importance*** (See page 10).

(3) The throttle must always be shut to idling position when lifting the clutch lever for engaging or disengaging gears.

(4) The engine must not be allowed to idle at slow speeds for long periods.

(5) Do not hold the handles firmly down if the machine jumps on striking a stump or similar obstacle, but just lightly resist the movement and let the machine right itself. This particularly applies when working on hillsides in badly cleared land.

(6) ***Do not attempt to reverse the machine with the rotor in gear.***

(7) When taking sharp corners, put the rotor out of gear, if necessary lifting the machine at the handles to help in turning.

(8) Never run the Gem with the engine labouring. By selecting the right gear and the correct depth of work a reserve of engine power is always in hand.

(9) When operating the Gem, use the clutch in the same way as in a car; that is, for changing gear only. Do not "slip the clutch" to obtain extra engine speed.

(10) For the first 12 hours after delivery, only light work should be done in order that the working parts are allowed to bed down properly.

CONTROLS

Throttle

The Throttle control lever is fitted under the right hand Handle bar grip. By raising it upwards the engine speed is increased; pressing it down slows the engine speed.

Clutch

The Clutch control lever is fitted under the left hand Handle bar grip. By raising it upwards, the clutch is "freed" and the engine drive is disconnected from the Gear box. In this position, both the Rotor and Travel gear may be engaged without excessive pressure.

Handle bar positioning lever

This is mounted on the main frame and is situated between the Gear levers. To swing the Handle bars to either side, press the Handle bar positioning lever down to its full extent and swing the Handle bar to whichever side it is desired.

Reversing gear lever

This will be found under the Handle bar positioning lever. ***To operate the Reverse gear, both Rotor and the Travel gear levers must first be out in the neutral position.***

Slightly increase the engine speed from the normal "tick over" at which it runs while the machine is in neutral, lift the clutch and then raise the Reversing gear lever to the full extent. Slowly release the clutch and the machine will move backwards.

Height of handle bars

To adjust the height to suit the operator, remove the bolt at each end of the Handle slide bar and select another hole in the lugs attached to the Handle bars.

Rotor gear control lever

The left hand lever on the Gear quadrant engages with either of two notches. Pushing the lever forward disengages the Rotor whilst pulling it back engages the Rotor.

Travel gear control lever

Next to the Rotor gear control lever and on the right hand side of the Gear quadrant are four notches. By pushing the lever into the appropriately marked notch the desired speed is obtained.

Rotor depth control lever

This is linked with the Depth control skid, or wheel, and situated under the reversing Gear lever. To lower the rotor for deeper work, the lever is raised, to decrease the depth the lever is pushed down.

Exhaust valve lifting lever

This is placed under the main frame over the centre of the Rotor shield and lifting up decompresses the engine for easy starting.

The engine starting handle

When this is not in use it is folded back on the rotor shield located in a bracket. When starting the engine, lift it out of the bracket and swing it forward until the recessed square on the handle will engage with the protruding square on the end of the starting dog on the gear box.

Magneto

On the BTH type, an advance and retard lever is fitted. Lift up to retard (for starting only) and push down for advance when the engine is running. "Wico" and "Lucas" have no manual advance and retard lever.

ENGINE TROUBLE CHART

Engine fails to start.

Fuel system:

Fuel supply turned off.
Fuel pipe choked or air lock.
Water or dirt in fuel.
Throttle too wide open.

Ignition system:

Magneto contact breaker point gaps need adjustment.
Spark plug dirty or faulty.
Spark plug point gaps need adjustment. Should be .020"—.025 gap.
Water or moisture in magneto.
Magneto contact breaker points stuck or dirty.
High tension lead cracked or perished.

Engine lacks power or runs irregularly.

Fuel system:

Fuel pipe partially blocked.
Jets partially blocked, or not correctly adjusted.

Ignition system:

Spark plug dirty.
Spark plug point gaps need adjustment.
Magneto contact points dirty or need adjustment.

Mechanical faults:

Valve springs weak or broken.
Cylinder head gaskets leaking.
Valve stuck open.
Valves badly burnt.
Valve clearance incorrect.
Broken piston rings.
Badly worn piston rings and/or cylinder bore.
Badly worn valve guides.

Engine stops suddenly.

Fuel system:

Fuel tank empty.
Water in fuel.
Overheating owing to lack of oil.
Jet blocked by foreign matter.

Ignition system:

Magneto contact breaker points stuck.

Engine overheats.

Ignition retarded too far.
Spark plug dirty.
Spark plug point gaps need adjustment.
Insufficient or poor grade of oil.
Engine requires decarbonising.
Valves not seating properly.
Engine cowling blocked with grass or weeds.
Flywheel fan blocked with grass or weeds.

PREPARING THE ROTARY HOE FOR WORK.

Before starting the engine, be sure that the petrol and oil taps under the tank are both turned on, and make certain that all the oiling points listed on the chart (inside back cover) have received attention. See that no nuts or bolts are loose, particular attention being paid to the Rotor blade bolts.

Standing on the right hand side of the machine looking forward, flood the carburettor, see that both the Rotor and the Travel gears are in neutral, (retard the magneto if of BTH type by raising the hand lever). Ensure that the throttle control lever is only just open. With the left hand lift the Exhaust valve lifter. Place the starting handle into position. Briskly crank the engine and release the Exhaust valve lifter after the first turn or two. When the engine starts replace the starting handle (and advance the magneto by pushing the lever down, if of BTH type).

When the engine is running adjust throttle control to a brisk idling speed, remove the oil filler cap (the front one on the petrol and oil tank) and ascertain that the engine oil is circulating through the engine. The oil will be seen returning to the tank in spurts if working satisfactorily. See that the Depth control handle is set so that the rotor is clear of the ground. Next, lift the clutch hand lever and engage the desired gear, release the clutch at the same time gently accelerating the engine.

COMMENCING CULTIVATION.

Adjust the Depth control lever to give the required depth of work, select the appropriate travel gear to give the required fineness of tilth, put the rotor gear in mesh and commence work keeping the engine running at a constant speed whatever type of work is being done. Do not race the engine if the work is light nor labour the engine if the work is heavy. After a little practice, no difficulty will be found in maintaining the best engine speed.

Rear shield.

To avoid an accumulation of soil choking the rotor and causing the use of unnecessary power, always keep the Rear shield well raised so that the blades will throw the soil clear.

To stop the engine.

Put both gears in neutral and then lift the Exhaust valve lifter.

LUBRICATION.

Engine. The oil compartment (front) point "A" on chart, of the fuel tank has a capacity of approximately 3 pints but care should be taken to fill it only to within ½" of the oil return pipe located inside the tank under the filler cap. Oil is fed to the oil feed pump and forced under pressure into the big end bearing, being returned to the tank via the filter by the scavenge end of Oil pump. ***Oil must be renewed completely after every 24 hours work.*** The oil may require topping up from time to time and the oil level should never be allowed to fall below ⅓ full.

Recommended oil:—Engine oil to suit prevailing temperature (see Oiling chart).

Rotor drive dog gear box. Remove the square headed plug, point "B" on Oil chart, and give half a dozen spurts of oil from the oil can. This should be done every 24 hours and particularly before starting up after any prolonged period of rest.

Recommended oil:—Engine oil to suit prevailing temperature (see Oiling chart).

Rotor drive chain box. Remove the square headed plug, point "C" on Oil chart, on top of the chain cover and using the dipstick from the gear box, fill the case up to the lower mark. A quarter of a pint is sufficient. Do not overfill as this may result in oil being forced on to the rotor friction clutch causing it to slip unnecessarily. This should be checked after every 24 hours of work.

Recommended oil:—Gear oil to suit prevailing temperature (see Oiling chart).

Rotor stub axle. Point "D" on Chart. Remove the round headed screw and, with an oil can, fill the oil space inside the rotor tube, every 24 hours work.

Recommended oil:—Engine oil to suit prevailing temperature (see Oiling chart).

Depth control wheel. Remove round headed screw and with oil can fill space inside the axle, every 24 hours. ***(Engine oil).***

Gear box. Every 24 hours check the level as indicated on the uppermost mark on the dipstick, which is attached to the square headed plug, point "E" on Oil chart, screwed into the top of the gear box. Normally, it should only be necessary to drain and renew the oil in the gear box after every four hundred hours of work. Drainage is best carried out when the oil is warm and it is a good practice to remove the drain plug at the end of a day's work leaving the plug out all night. Capacity of the gear box is approximately ¾ gallon.

Recommended oil:—Gear oil to suit prevailing temperature (see Oiling chart).

In addition to these lubrication directions, points such as the slide bar of the swinging handlebars, and the fulcrum levers of the throttle and the clutch controls should be oiled to ensure free movement, using engine oil.

GENERAL MAINTENANCE.

Engine clutch. The clutch is of a single fibre disc type, simple in operation and efficient in work. It should be adjusted with a little play on the lever (about ¼ inch at the end) so that the Thrust bearing is free except when the Hand lever is lifted. Adjustment can be made by unscrewing the Clutch connecting rod (G.800) in the Eyebolt (G.703) on the Clutch fulcrum lever (G.710) near the engine.

Rotor friction drive. The rotor to which the blades are bolted is driven direct from the main gear box through a friction clutch similar to that on the road wheel and are adjusted by four ½" nuts. This clutch is not intended to operate except when the rotor blades strike a hidden object, and must be adjusted so that no slip takes place

when working under ordinary conditions. Do not tamper with the clutch and if it is suspected that it operates too freely, it should be checked by a Service agent.

Road wheels. The road wheels are mounted on wheel hubs and friction driven by a clamping plate with four springs and nuts. These are adjusted so that the wheels have sufficient grip to pull the machine but will slip if they become jammed with an obstruction between the wheel and the frame. Adjustment—fully compress the four springs by screwing up the four nuts, and slacken back the nuts $\frac{1}{4}$ of a turn.

Air cleaner. ***Regular attention to this is most important. The oil level must be checked after every 8 hours running and after every 24 hours it must be dismantled and thoroughly cleaned out. To remove the cleaner, loosen the clamping nut on top of clamping bracket and, leaving the cover still connected to the hose connection, take the air cleaner bodily from its platform. Separate the top from the bottom half of the cleaner and pour away the dirty oil in the reservoir. Wash out all sediment in the bottom thoroughly with petrol. Then, remove the serrated spring clip in the filter container and carefully take out the wire gauze filters and wash them in petrol. Next, refil the oil reservoir to the level indicated with CLEAN engine oil. Put the wire gauze filter back into the container making sure that the perforated plates and the serrated spring clip are replaced. Now place the two halves together (with the felt washer between), replace the cover taking care that the cover felt washer is intact and clamp back into position.***

If working under exceptionally dusty conditions the air cleaner requires cleaning every 6 hours.

Oil filter.—***When changing the Engine oil, make it a routine job to clean the filter at the same time. To extract the filter element from the tube undo the large brass cap at the rear end and withdraw the filter and centre tube. Wash it thoroughly in petrol and if the bag is damaged replace it with a new one.***

When replacing the filter element, make sure that the brass caps are securely tightened up.

Maintenance of Hoe blades. It is essential that only the cutting edge should rub in the soil and that the back should have clearance. The Blades are designed so that use in average soil tends to sharpen them, but if the machine is to be used on stony ground it is suggested that two sets of hoe blades should be used alternately in order that one set may be kept sharpened.

The efficiency of the machine depends largely on the condition of the hoe blades. If these get bent through striking solid obstacles in the ground and are not straightened, they will require twice the power to drive, the quality of work will be poor and the blades will wear out quickly. Trouble will also be experienced with clogging under the shield. Therefore, a keen lookout should be kept for bent blades which must be straightened up as soon as noticed with the Blade setting bar which is provided, the hooked end of which is intended to fit over the blade.

Rotor flange weedcutters. Two Weedcutter blades are provided to prevent long grass or weeds from binding round the end Rotor flanges. Adjustment is made by slackening the two setscrews securing the weedcutter blade and tapping the blade until it is within $\frac{1}{32}$ of the Rotor flange, revolve the Rotor by hand to make sure the blade does not foul and retighten the setscrews.

Oil pump. The engine is of the dry sump type with a gear driven plunger pump. The right hand end of the plunger forces the oil into the big end bearing while the left hand end scavenges the used oil from the engine sump and returns it through the filter back to the tank. The pump is simple and positive in action and normally requires no attention and any failure of oil to return to the tank need not necessarily be caused by a faulty pump. If oil is not being returned first check all oil pipe connections for air leaks. Not only union nuts but joints of nipples and pipes should be closely inspected. More failures in oil circulation are attributable to air leaks than to any other cause. Bent or flattened pipes which may impose restrictions in oil flow also are common causes of faulty circulation, Particular attention should be paid to the crankcase oil suction pipe, where it is connected to the crankcase. When satisfied that no air leaks exist, inspect breather to see that spring holds valve ball firmly on its seat. Next inspect the oil pump fulcrum screw (8455) located on the pump body. This screw has a plain unthreaded end which locates in a helically cut groove in the pump plunger and its function is to give the necessary reciprocating action to the pump while the latter is rotating. If this screw becomes loose or lost the pump ceases to function. See that it is always kept tightly screwed home. If these adjustments fail to correct the faults in the oil system, the Service agent should be consulted.

Engine carburettor. Before the engine leaves the works, the carburettor is tested and the variable jet adjusted to give the best all-round performance. If, at any time, the setting is disturbed it will be found that $1\frac{1}{2}$ turns open is the most satisfactory position.

To clean the carburettor jet it is necessary to take out the main jet body (BJ.9106) through which the main jet adjusting screw operates, the idling jet is a very small hole drilled in the groove halfway up the jet bolt.

If black smoke (not blue) is emitted from the silencer when the engine is running under normal load the jet should be slowly screwed in until this stops.

If black smoke is seen when engine is idling, the Idling jet adjusting screw (BJ.9104) requires to be unscrewed slowly until this ceases.

Magneto (Wico). The Magneto will normally require little or no attention, but the point gap should be checked about every two hundred hours. To do this remove the contact breaker cap and slowly turn the engine by the engine starting handle until the points are fully open. With the feeler gauge measure the gap, the feeler (.020″) should just slide between the open points, if adjustment is necessary loosen the locking screw (top one) and turn the lower screw which has an eccentric head until the correct gap width is obtained, then tighten the locking screw. Re-check gap after tightening.

Magneto (BTH). The points on a BTH magneto are adjusted as follows: Remove the contact breaker cap and turn the engine until the points are fully open, then if the feeler gauge does not slide between the points slacken the locking nut of the fixed point and screw the point in or out to get the correct setting, then securely lock in position by the lock nut previously slackened. Re-check gap after locking.

Magneto (Lucas). To adjust the points on a Lucas magneto remove the contact breaker cap and turn the engine until the points are fully open then if the feeler gauge does not slide between the points slacken the two screws holding the base of the fixed point by half-a-turn. Gently prize with small screwdriver the base either way as required (it will pivot on the brass hinge pin of the contact breaker) until the correct gap is secured and then tighten the two screws previously slackened. Re-check gap after tightening.

To fit a new Magneto, or replace existing one after it has been removed.

Wico only. Remove the inspection plug in cylinder head and turn the engine until the piston is $\frac{3}{8}''$ before the top dead centre on the firing stroke (i.e., both valves are closed). Now slacken the three screws in the Magneto drive flange on the Camshaft so the Flange can be revolved without moving the Camshaft. Next, remove the contact breaker cap (held by two spring clips) on the magneto and turn the driving flange ***anti-clockwise*** when viewed from the Contact breaker end until the points are just ***closed.*** Now assemble the magneto on the engine and secure all the parts previously removed or loosened. The above directions are for "Wico" type magneto only.

BTH or Lucas. Set the piston $\frac{3}{8}''$ before top dead centre of firing stroke, remove contact breaker cover and turn magneto flange ***clockwise*** when viewed from the contact breaker and until the points are just ***opening.*** Reassemble to engine and secure all parts previously removed of loosened (note the BTH magneto should be in the advanced position).

Valve timing. If at any time the camshaft or crankshaft is removed the engine can be retimed as follows:—Fit and assemble the crankshaft, cylinder, piston, valve chamber and tappets, turn the engine until the piston is $\frac{1}{32}$ after top of stroke, now turn the camshaft clockwise when viewed from magneto drive flange end, until the tappet is just closing the exhaust valve. This is the correct time, now lock the Driving timing gear on the crankshaft by the Timing gear nut (note left-hand thread turn anti-clockwise to tighten) and replace any parts removed. Correct tappet clearance is important before setting the valves.

Tappets. These may require checking once or twice during the season and whenever the engine is being decarbonised. To do this, slacken the valve covers so that the tappets may be observed, now turn the engine slowly until the exhaust valve has closed and continue turning for another $\frac{1}{4}$ turn of the ***camshaft.*** The gap between tappet cap nut, and valve stem, should be .010″. Adjust the tappet cap nut until this is obtained and lock securely with the tappet cap locknut. The inlet valve is adjusted in the same way except that the gap should be .008″.

Decarbonising the Engine. This will only be necessary after at least 400 hours running, and should preferably be left to the service agent who has the facilities to do the work and check the extent of cylinder, piston and valve wear.

If, however, it is essential for this work to be done on site the following method should be followed.

Remove the cylinder cowling, disconnect the petrol pipe at the carburettor and air cleaner hose. Remove all the cylinder head bolts and studs and the sparking plug (it is advisable that they should be replaced in their respective holes when reassembling). The cylinder head and valve chamber will now lift off. Turn the engine until the piston is at the top of its stroke and remove the carbon deposit with a blunt knife, do not scratch the piston but thoroughly clean off any carbon. Leave a ring of carbon about $\frac{1}{8}''$ wide around the edge of this piston as this assists in maintaining an oil seal.

Next remove the valves. Carefully mark the valve heads to ensure that they are replaced in the correct positions. Place the valve chamber upside down on a bench and with two screwdrivers, compress the spring so that the split taper cotters can be removed. The valves will then withdraw through the top. The valve heads should be cleaned with sand paper and any carbon deposit removed from the valve pockets. Smear a small amount of FINE grinding paste on the bevelled face of the valve and placing a broad headed screwdriver in the slot in the head, rub the valve on its seating with an oscillating rotary action. Do not rotate the valve continually in one direction. The valve should show a continuous bright ring all round. If any breaks or thin places show, repeat the operation. Only the minimum grinding must be given to produce this condition:—a deep recessed groove in the face will impair the seating of the valve. Any burnt or deeply pitted valves should be replaced by new ones. The valve seating should show a similar continuous bright ring of uniform width. If the seat width is much over $\frac{1}{16}''$ it is necessary to have it refaced, and this should be attended to by the Service agent at the first opportunity.

Remove all trace of grinding paste from the valve and seating by washing in petrol. Reassemble the valves, smearing a little clean oil on the valve stems.

Clean the face of the cylinder head, valve chamber and cylinder and replace the gaskets which, if at all damaged, should be renewed. When tightening up the cylinder head studs and bolts, tighten each an equal amount until they are all dead tight, and check the tappet clearance as previously described. Replace the carburettor, petrol pipe and air cleaner hose; run the engine for two or three minutes on closed throttle and re-tighten the cylinder head studs before replacing the cylinder cowling. Take care that the engine does not overheat.

ATTACHMENTS AND EQUIPMENT.

Various attachments may be used with the Rotary Hoe Gem.

For Mobile work.

Furrowing attachment.
Furrow covering attachment.
Picktyne rotor.
Depth control wheel.
Roller attachment.
Extension rims.

For Stationary work.

Machine stand.
Power take-off pulley.
Soil shredder.
Waterproof cover.

N.B.—When using the Power take-off pulley or the Soil shredder, the Gem must always be mounted on the machine stand to ensure adequate lubrication.

FITTING ATTACHMENTS.

The Furrowing attachment is fitted on to the depth control skid. First remove the Depth control skid by pivoting the Depth control lever clip; pull the Depth control lever sideways until the pin engaging in the Skid is withdrawn and the Skid may then be pulled out of the Depth control socket from under the Rotor shield.

Assemble the Furrowing attachment on to the Depth control skid leaving the bottom of the Attachment approximately ½" above the foot of the Skid, or as required for the crop to be planted, and tighten locking nut. Fit the assembly in the Depth control socket and connect to Depth control lever. For machines where a Depth control wheel has been fitted in place of a Skid, the Skid must also be ordered in addition to the Furrower attachment. When using the Furrower, the Rotor is put in gear so that the combined operations of cultivating and furrowing are carried out simultaneously.

The Furrow covering attachment is fitted into the depth control sockets in the same way as the Furrower, except that it is supplied with its own pedestal. When in use, the rotor should be out of gear and allowed to roll over the ground like a wheel.

The Roller attachment is used in place of the Depth control wheel or Skid, and is intended to consolidate the land. The Roller may be loaded with sand to increase its weight and will leave a smooth surface ready for drilling or planting. This attachment is used in conjunction with the rotor.

Depth for the above operations is controlled in the same way as for ordinary cultivations.

Road wheel extension rims can be supplied when the machine has a tendency to sink in very light lands, and to prevent side slip when working on steep contours. They are bolted by five bolts to holes provided in the existing road wheels (cleated type only). The Road wheel extension flange can be supplied with, or without, serrations (the illustration in the Parts list shows the serrated type). Alternatively, the flange may be removed to leave a plain extension rim only. It is necessary to use a special starting handle with these rims and one is supplied with all orders for rims.

The Picktyne rotor which is used for special work such as dealing with very hard soil conditions or for pasture renovation is fitted as follows:—

Remove all nuts and bolts holding the stub axle on to the Rotor support bracket, Staytube and Rotor shield. Remove the four Rotor friction drive adjusting nuts and springs; by sliding the Rotor sideways it can be withdrawn. The Picktyne rotor is then fitted by reversing the operations above. Unless otherwise stated, the Picktyne rotor is supplied complete with Picktynes, bolts and nuts and stub axle assembly.

To fit the Machine stand which must always be used when operating the Power take-off or the Soil shredder, place a strong wooden box under the engine silencer and lift the machine clear of the ground by the handlebars. The stand is then put in position so that the Road wheel axle bearing casting sits in the two "U" shaped arms provided on the stand. The machine is lowered and the Road wheels will be clear of the ground. See that the machine is standing on the Depth control skid or wheel, and that the weight is not on the Rotor. When using the Power take-off the machine should be put in low gear to ensure that the oil circulates. ***Do not put the Rotor in gear*** unless using the Soil shredder.

To fit the Power take-off. Remove the hinge bolt for the Starting handle, remove the four set screws holding the Starting dog bearing cover in place on the Gear box side plate and remove the Cover and Loose dog. Assemble Power take-off casting in place of the Bearing cover, ensure that the Dogs in the bearing and the Power take-off mesh before replacing the four set screws. Next insert the Starting handle hinge bolt in the hole provided in the Power take-off casting and tighten. After oiling the Power take-off bearing behind the pulley it is ready for use.

To fit Soil shredder. Remove depth control skid or wheel and remove the two end rotor blades on the right hand flange and replace them with the Feeder blades. Next, lift the machine sufficiently high to pass the Shredder into position under the Rotor, lower the machine, ensuring that the lugs on the Shredder locate on the Staytube and Chain case and tighten the clamping bolts. The Machine stand must be used with the Shredder, and the machine put in low gear to ensure oil circulation throughout the gear box.

A Waterproof canvas cover can be supplied for covering the "Gem" when not in use.

NOTES ON ORDERING SPARE PARTS.

Important. When ordering spare machine parts always quote the serial number of your machine which will be found stamped on the main frame member at the rear of the fuel tank. In the case of engine parts the number of the engine which will be found on top of the cowling should also be quoted. This information will ensure correct parts being sent.

All reference to left and right hand are to be read as from rear of machine looking forward.

The following parts can only be supplied assembled or in pairs owing to the precision fits that are necessary:—

G.363 & 366	Crown wheel and Pinion.
G.303	Differential bull wheel, pinions and Pinion pins.
G.1033	Reversing gear assembly, comprising gear, bush, pin, nut and Tumbler arm.
G.331	Road wheel shaft and Fixed hub gear.
BJ.8310	Timing cover and Oil pump body, Oil pump plunger, Drive gear and Fulcrum pin.
BJ.8730	Connecting rod and Top end bush.
BJ.8220	Tappet and Guide.
BJ.8700A	Piston complete with set of rings, Gudgeon pin and Circlips.
BJ.8001	Engine flywheel complete with Clutch pins.
BJ.8006	Engine flywheel nut complete with Ballrace and Retaining plate.
G.600A	Rotor complete with Dust cover and Stub axle assembly.
G.530	Chain box back plate complete with Rotor bearing housing and Dust cover.
G.438	Jackshaft can be supplied separately, but if the Crown wheel and Pinion require replacement the complete assembly of Jackshaft, crown wheel and Pinion should be ordered.
BJ.8280 BJ.8270	Crankcase and Flywheel scrapers.
BJ.8500 BJ.8810	Camshaft and Timing gear.

When ordering a new part it is suggested that the part be located from the Parts drawings and the Part number quoted, after reference to the numerical Parts lists, the correct name of the part should also be quoted.

The prefix "G" before a part number denotes a "Gem" part. "BJ" denotes an engine part and "S" denotes a "standard" part.

When the cylinder requires reboring it is essential that it be returned to the works for this operation owing to the special taper bore.

Oversize pistons are not normally supplied without a rebored cylinder.

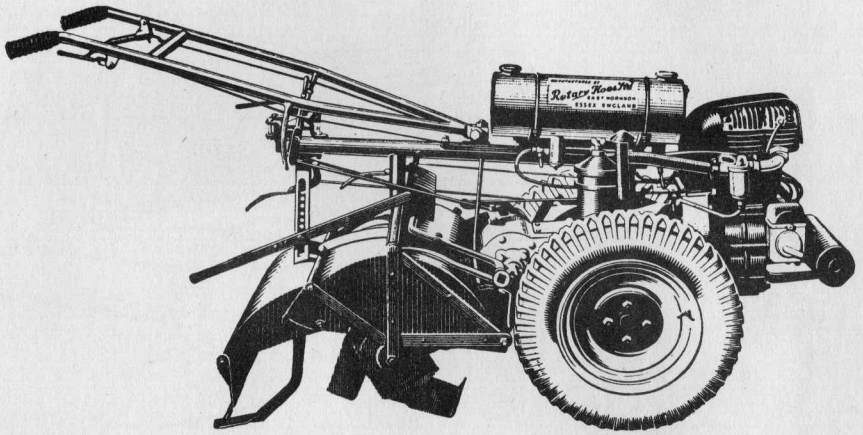

The HOWARD PATENT "GEM" ROTARY HOE

Plate No. 1.

CYLINDER PISTON, CRANKSHAFT and CRANKCASE.

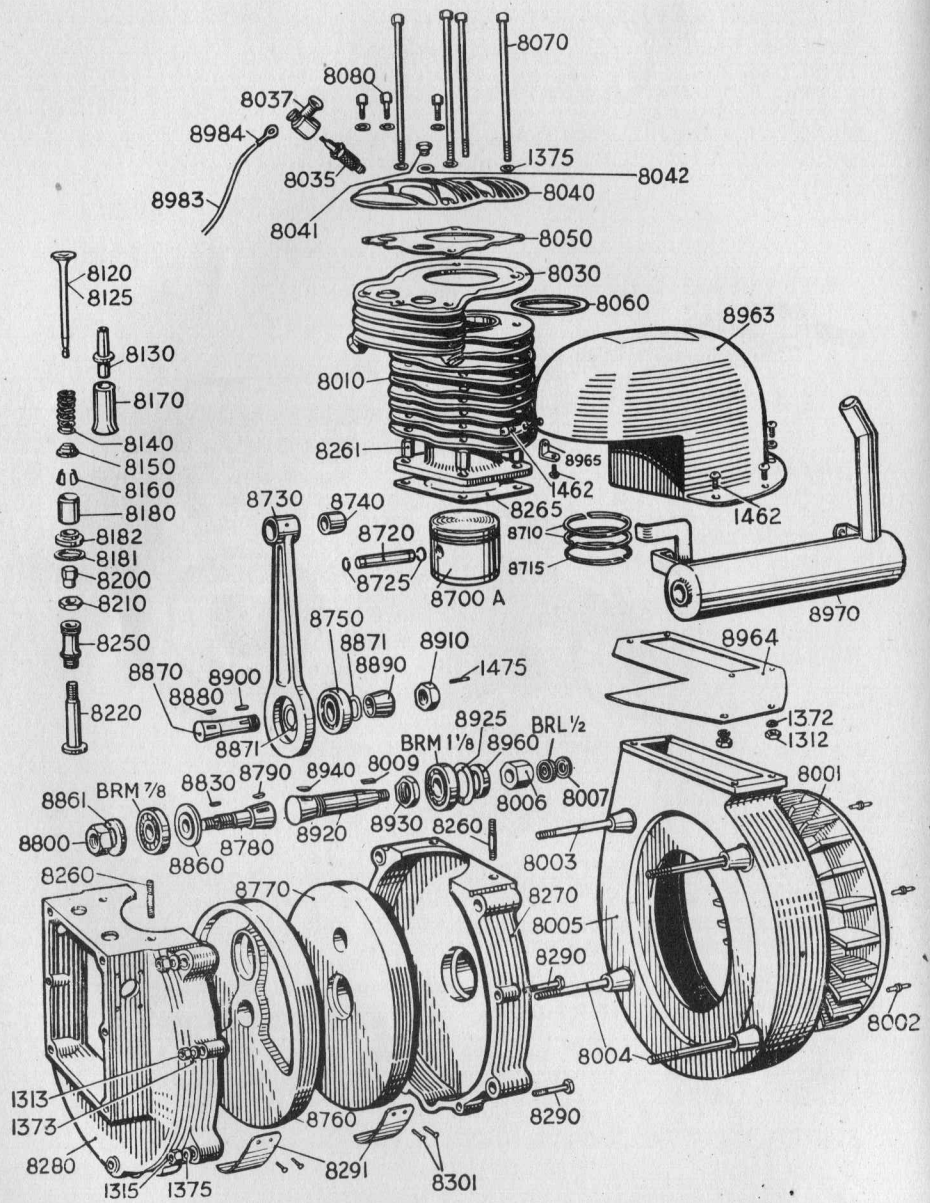

PARTS FOR "BJ" ENGINE

Plate No. 1

Part No.	*Description*	*No. off*
BJ.8001	Flywheel	1
BJ.8002	Flywheel clutch pin	6
BJ.8003	Flywheel housing studs (short)	2
BJ.8004	Flywheel housing studs (long)	2
S.1315	Flywheel housing stud nuts	4
S.1375	Flywheel housing studs spring washer	4
BJ.8005	Flywheel housing	1
BJ.8006	Flywheel nut	1
BRL.½	Flywheel nut ball bearing	1
BJ.8007	Flywheel nut ball bearing retaining plate	1
BJ.8009	Flywheel key	1
BJ.8010	Cylinder	1
BJ.8030	Valve chamber	As reqd.
BJ.8031	Valve chamber insert	1
BJ.8035	Spark plug (KLG) .18m/m corundite	1
BJ.8037	Spark plug terminal cover	1
BJ.8040	Cylinder head	1
BJ.8041	Inspection plug	1
BJ.8042	Inspection plug copper asbestos washer	1
BJ.8050	Cylinder head gasket	1
BJ.8060	Valve chamber gasket	1
BJ.8070	Cylinder head holding down stud (long)	4
S.1375	Cylinder head holding down stud spring washer	4
BJ.8080	Cylinder head bolts (short)	3
S.1375	Cylinder head bolts spring washer	3
BJ.8120	Exhaust valve	1
BJ.8125	Inlet valve	1
BJ.8130	Valve guide	2
BJ.8140	Valve spring	2
BJ.8150	Valve spring cups	2
BJ.8160	Valve spring collets	2 pr.
BJ.8170	Valve spring upper cover	2
BJ.8180	Valve spring bottom cover	2
BJ.8181	Valve spring bottom cover lock nut	2
BJ.8182	Valve spring bottom cover centering ring	2
BJ.8200	Tappet cap	2
BJ.8210	Tappet cap lock nut	2
BJ.8220	Tappets	2
BJ.8250	Tappet Guides	2
BJ.8260	Cylinder base stud	4
BJ.8261	Cylinder base stud nut	4
BJ.8265	Cylinder base gasket	1
BJ.8270	Crankcase drive side	1
BJ.8280	Crankcase timing side	1
BJ.8290	Crankcase flanging studs	4
S.1313	Crankcase flanging stud nuts	8
S.1373	Crankcase flanging stud spring washers	8
BJ.8291	Crankcase splash plate	2
BJ.8301	Crankcase splash plate rivet	4
BJ.8700A	Piston	1
BJ.8710	Piston ring (compression)	2
BJ.8715	Piston ring (oil control)	1
BJ.8720	Gudgeon pin	1
BJ.8725	Gudgeon pin circlip	2
BJ.8730	Connecting rod	1
BJ.8740	Connecting rod top end bush	1
BJ.8750	Connecting rod bottom end bearing	1
BJ.8760	Flywheel timing side	1
BJ.8770	Flywheel drive side	1

Plate No. 2.

CAMSHAFT, TIMING GEAR, OIL PUMP and MAGNETO.

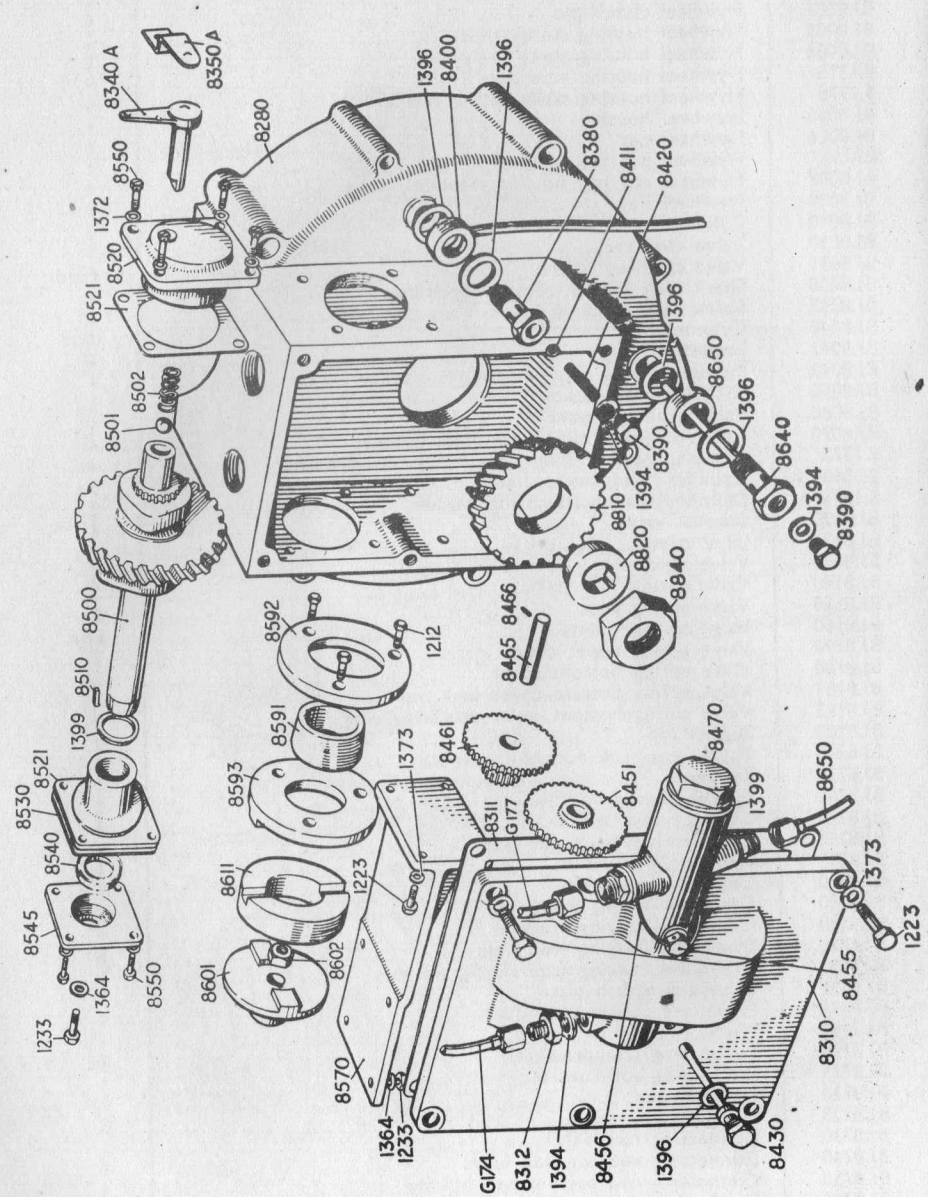

PARTS FOR "BJ" ENGINE

Plate No. 1

Part No.	*Description*	*No. off*
BJ.8780	Crankshaft timing side	1
BJ.8790	Crankshaft timing side key	1
BJ.8800	Crankshaft timing side nut	1
BJ.8830	Crankshaft timing gear bush key	1
BRM.$\frac{7}{8}$	Crankshaft timing side ball bearing	1
BJ.8860	Crankshaft timing side oil seal disc (large)	1
BJ.8861	Crankshaft timing side oil seal disc (small)	1
BJ.8870	Crankpin	1
BJ.8871	Crankpin shim	2
BJ,8880	Crankpin key	1
BJ.8890	Crankpin flywheel bush	1
BJ.8900	Crankpin flywheel bush key	1
BJ.8910	Crankpin nut	1
S.1475	Crankpin locking screw	1
BJ.8920	Crankshaft drive side	1
BJ.8930	Crankshaft drive side nut	1
BJ.8925	Crankshaft drive side shim	As reqd.
BJ.8940	Crankshaft drive side key	1
BRM.1$\frac{1}{8}$	Crankshaft drive side ball bearing	1
BJ.8960	Crankshaft drive side oil seal	1
BJ.8963	Cooling blast shroud	1
BJ.8964	Cooling blast shroud base plate	1
S.1462	Cooling blast shroud base plate screws	6
S.1312	Cooling blast shroud base plate screws nuts	2
S.1372	Cooling blast shroud base plate screws spring washers ...	6
BJ.8965	Clip for shroud	1
S.1462	Clip to shroud set screw	1
S.1462	Clip to cylinder set screw	1
S.1372	Clip set screw spring washers	2
BJ.8970	Exhaust muffler	1
BJ.8983	Magneto lead	1
BJ.8984	Magneto lead terminal spade	1

Plate No. 2

Part No.	*Description*	*No. off*
BJ.8310	Timing cover and Oil pump body	1
BJ.8311	Timing cover and Oil pump body gasket	1
S.1223	Timing cover and Oil pump body set screw	5
S.1373	Timing cover and Oil pump body spring washer	5
BJ.8312	Oil pump union	3
S.1394	Oil pump union washer	3
BJ.8340A	Exhaust valve lifting spindle	1
BJ.8350A	Exhaust valve lifting spindle clip	1
BJ.8380	Breather body	1
BJ.8390	Breather body plug	1
S.1394	Breather body plug washer	1
BJ.8400	Breather tube	1
S.1396	Breather ring washer	2
BJ.8411	Breather ball valve	1
BJ.8420	Breather ball valve spring	1
BJ.8430	Crankshaft oil feed screw	1
S.1396	Crankshaft oil feed screw washer	1
BJ.8450	Oil pump plunger	1
BJ.8451	Oil pump drive gear	1
BJ.8455	Oil pump plunger fulcrum screw	1
BJ.8456	Oil pump plunger fulcrum screw locking wire	
BJ.8461	Oil pump drive intermediate gears	1

Plate No. 3.

AIR CLEANER and CARBURETTOR.

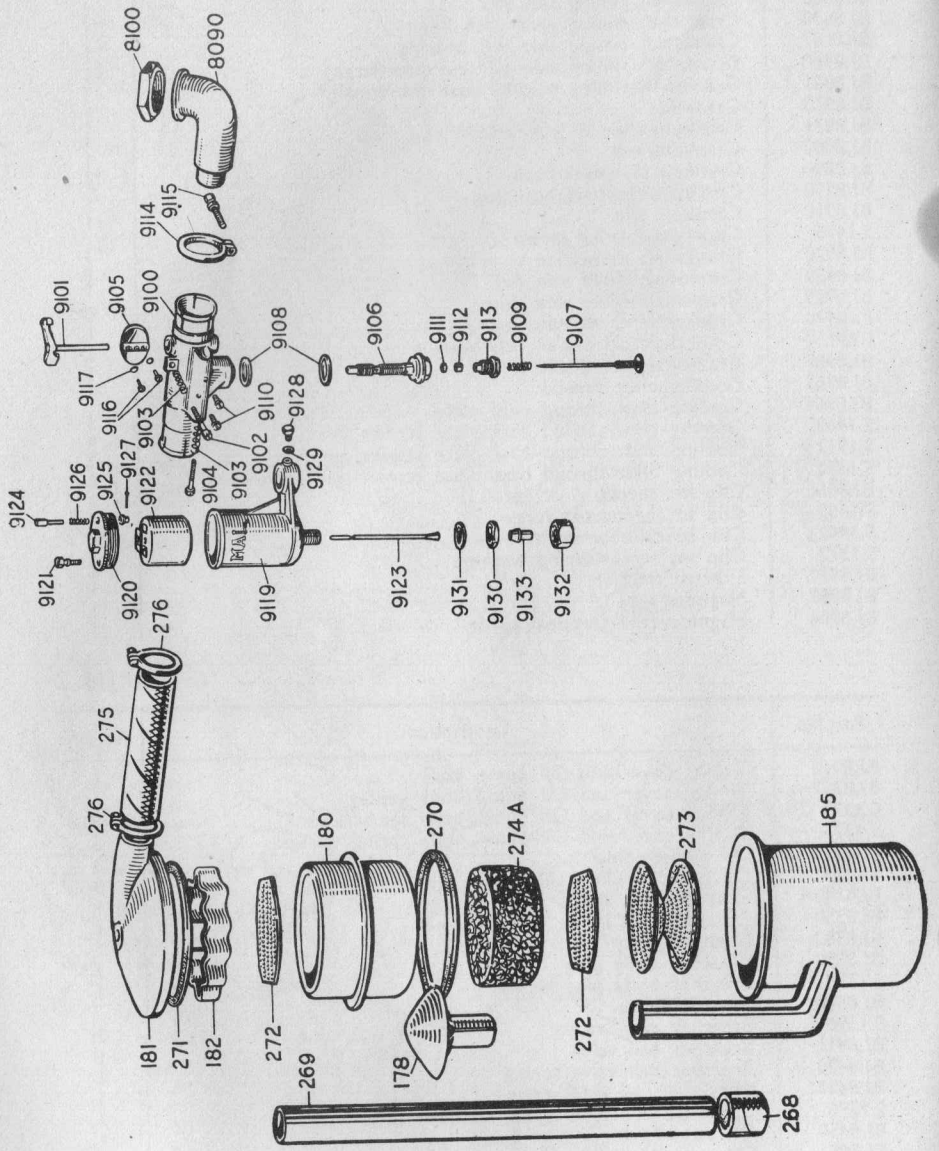

PARTS FOR "BJ" ENGINE

Plate No. 2

Part No.	*Description*	*No. off*
BJ.8465	Oil pump drive intermediate gears, spindle	1
BJ.8466	Oil pump drive intermediate gears, spindle taper pin ...	1
BJ.8470	Oil pump body plug	1
S.1399	Oil pump body plug washer	1
BJ.8500	Camshaft	1
BJ.8501	Camshaft thrust ball	1
BJ.8502	Camshaft thrust ball spring	1
S.1399	Camshaft thrust fibre washer	1
S.1364	Camshaft set screw flat washer	1
BJ.8510	Camshaft key	1
S.1233	Camshaft set screw	1
BJ.8520	Camshaft bearing (exhaust lift side)	2
BJ.8521	Camshaft bearing gasket	1
BJ.8530	Camshaft bearing (magneto side)	1
BJ.8540	Camshaft oil seal	8
BJ.8550	Camshaft bearing set screws	1
BJ.8545	Camshaft oil seal holder	8
S.1372	Camshaft bearing spring washers	1
BJ.8570	Magneto platform	4
S.1223	Magneto platform fixing screws	4
S.1373	Magneto platform fixing screws spring washers	1
BJ.8591	Magneto coupling body camshaft half	1
BJ.8592	Magneto coupling flange locking plate	1
BJ.8593	Magneto coupling flange drive plate	3
S.1212	Magneto coupling flange locking plate set screw	1
BJ.8601	Magneto flange (B.T.H. and Lucas)	1
BJ.8602	Magneto flange nut (B.T.H. and Lucas)	1
BJ.8611	Magneto laminated coupling	1
BJ.8640	Crankcase oil suction body	2
S.1396	Crankcase oil suction body washer	1
BJ.8650	Crankcase oil suction pipe	1
BJ.8810	Crankshaft timing gear	1
BJ.8820	Crankshaft timing gear bush	1
BJ.8840	Crankshaft timing gear bush nut	2
S.1233	Magneto holding down set screws	2
S.1364	Magneto holding down set screw washers	

Plate No. 3

Part No.	*Description*	*No. off*
G.178	Air cleaner inlet pipe cap	1
G.180	Air cleaner gauze container	1
G.181	Air cleaner cover	1
G.182	Air cleaner gauze container clip	1
G.185	Air cleaner tank	1
BJ.8090	Induction pipe	1
BJ.8100	Induction pipe nut	1
G.268	Air cleaner extension tube hose connection	1
G.269	Air cleaner extention tube	1
G.270	Air cleaner tank gasket	1
G.271	Air cleaner cover gasket	2
G.272	Air cleaner perforated plate	1
G.273	Air cleaner perforated base cone	1
G.274A	Air cleaner gauze filter	1
G.275	Air cleaner cover to Carburettor hose	2
G.276	Air cleaner cover to Carburettor hose clips...	

NOTES

PARTS FOR "BJ" ENGINE

Plate No. 3

Part No.	*Description*	*No. off*
	PARTS OF "AMAL" CARBURETTOR (not manufactured by Rotary Hoes).	
BJ.8098	Carburettor complete	1
BJ.9100	Carburettor body	1
BJ.9101	Throttle lever spindle and Stop	1
BJ.9102	Stop screw	1
BJ.9103	Stop screw and Air adjusting screw springs	2
BJ.9104	Air adjusting screw	1
BJ.9105	Throttle valve	1
BJ.9106	Adjustable main jet body	1
BJ.9107	Needle for Adjustable main jet	1
BJ.9108	Washer for Float chamber	2
BJ.9109	Spring for Needle	1
BJ.9110	Plug screws for Mixing chamber	2
BJ.9111	Gland washer	1
BJ.9112	Cork gland	1
BJ.9113	Gland adjusting screw	1
BJ.9114	Outlet clip	1
BJ.9115	Outlet clip pin	1
BJ.9116	Throttle valve screw	2
BJ.9117	Throttle valve screw lock washer	2
BJ.9118	Float chamber complete	1
BJ.9119	Float chamber only	1
BJ.9120	Float chamber cover	1
BJ.9121	Cover lock screw	1
BJ.9122	Float	1
BJ.9123	Needle	1
BJ.9124	Tickler	1
BJ.9125	Tickler stop...	1
BJ.9126	Tickler spring	1
BJ.9127	Tickler cotter	1
BJ.9128	Plug screw	1
BJ.9129	Plug screw washer	1
BJ.9130	Needle seat lock nut	1
BJ.9131	Needle seat lock nut washer	1
BJ.9132	Petrol union nut (part of G.173)	1
BJ.9133	Petrol union nipple (part of G.173)	1

Plate No. 4

Part No.	*Description*	*No. off*
BJ.8562	B.T.H. Magneto hand control lever	1
S.1466	B.T.H. Magneto hand control lever set screw	1
S.1312	B.T.H. Magneto hand control lever set screw nuts ...	2
S.1382	B.T.H. Magneto hand control lever set screw thackery washer	1
BJ.8563	B.T.H. Magneto hand control lever set screw bracket ...	1
BJ.8568	B.T.H. Magneto hand control connecting link	1

NOTES

PARTS OF ROTARY HOE

Plate No. 5

Part No.	*Description*	*No. off*
G.143	Wheel hub keys	4
G.299	Loose hub gear bearing	1
G.303	Differential bull wheel (complete)	1
G.305	Loose hub gear oilseal	1
G.307	Differential loose hub gear	1
G.308	Differential wheel hub	1
G.309	Differential wheel hub dust cover	1
G.310	Differential wheel hub dust cover set screws	3
G.311	Road wheel shaft washer...	1
G.312	Road wheel shaft nut	1
G.328	Differential hub nut	1
S.1475	Differential hub nut locking screw	1
G.330	Loose hub gear shim	1
S.1434	Roadwheel shaft split pin	2
G.334	Layshaft Gear, small	1
G.337	Fixed hub gear	1
S.1514	Fixed hub gear rivets	6
G.339	Layshaft gear large	1
G.341	Bull pinion	1
G.342	Bull pinion shim	As reqd.
G.343	Layshaft bearing housing	1
G.344	Layshaft bearing cap	1
G.345	Layshaft bearing cap gasket	1
S.1223	Layshaft bearing cap set screws...	3
S.1373	Layshaft bearing cap spring washers	3
G.346	Layshaft	1
S.1357	Layshaft nut	1
S.1436	Layshaft split pin	1
G.348	Layshaft bearing distance piece	1
G.351	Layshaft bearing (r.h.)	1
G.371	Low gear wheel	1
G.403	Road wheel shaft bearing cap, r.h.	1
G.404	Road wheel shaft bearing cap gasket, r.h.	1
S.1233	Road wheel shaft bearing cap set screws, r.h.	3
S.1374	Road wheel shaft bearing cap spring washers, r.h.	3
G.469	Gear box side plate	2
S.1223	Gear box side plate set screws	1
S.1373	Gear box side plate set screws spring washer	14
G.478	Gear box gasket	3
G.486	Gear box side plate dowels	1
G.1015	Reverse gear selector crank	1
G.155	Reverse gear arm key	1
G.1026	Reverse gear connecting link	1
G.1027	Reverse gear connecting link pin (short)	1
S.1422	Reverse gear connecting link split pin	1
S.1028	Reverse gear connecting link pin (long)	1
S.1422	Reverse gear connecting link split pin	1
G.1029	Reverse gear tumble arm	1
G.1030	Reverse gear tumble arm bearing	1
G.1031	Reverse gear arm bearing spacer	1
G.1032	Bearing shim	1
G.1033	Reverse gear	1
G.1034	Reverse gear bush	1
G.1035	Reverse gear pin	1
S.1356	Reverse gear pin nut	1
S.1422	Reverse gear pin split pin	1

Plate No. 5. ROTARY HOE GEARBOX.

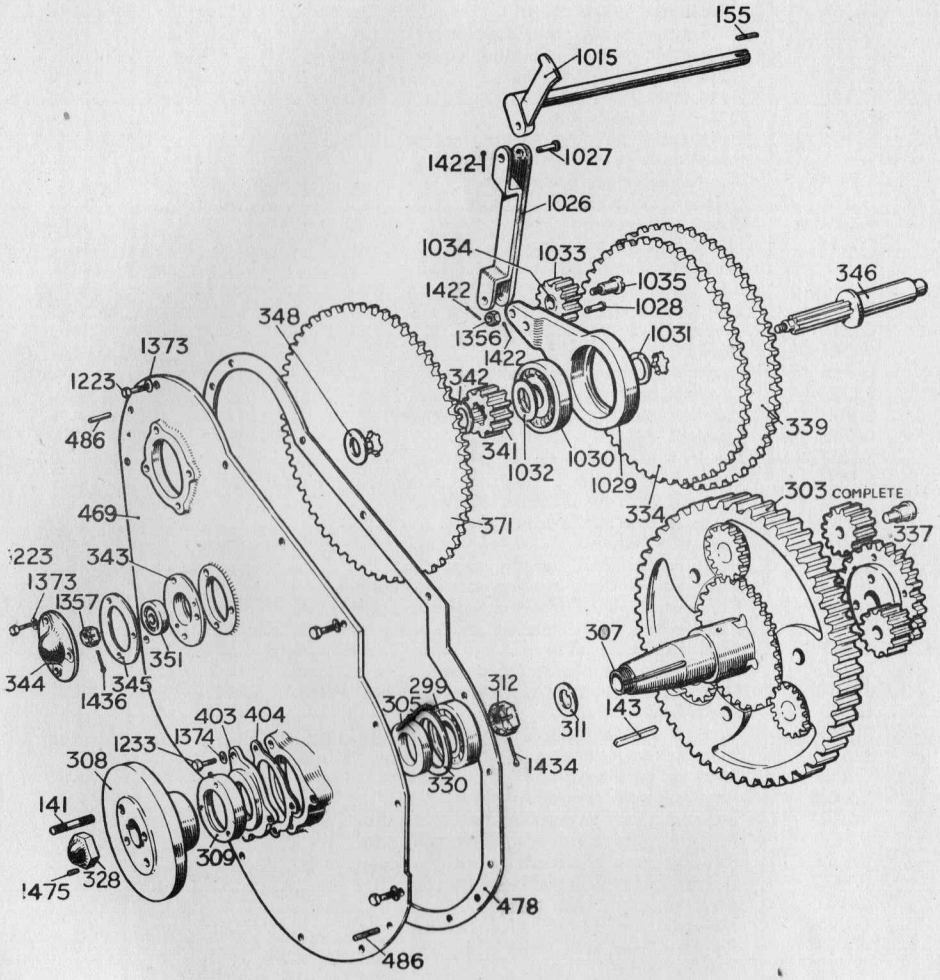

Plate No. 5A. ROTARY HOE GEARBOX.

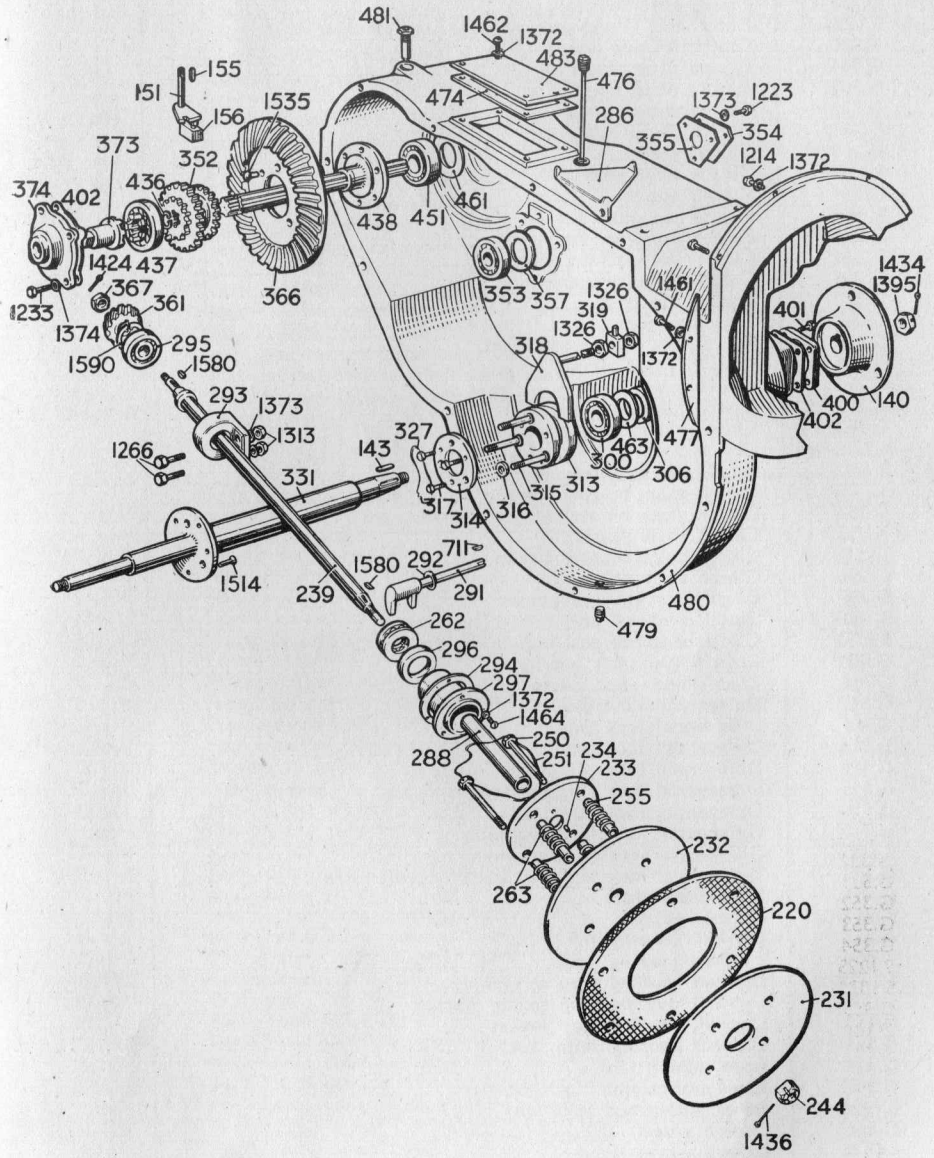

Part No.	Description	No. off
G.140	Wheel hub	1
G.151	Travel gear selector	1
S.1225	Rotor and Travel gear control arm pinching bolt	2
G.220	Clutch friction disc	1
G.231	Clutch plate, loose	1
G.232	Clutch plate, fixed	1
G.233	Clutch thrust plate	1
G.234	Clutch thrust plate pin	1
G.239	Clutch shaft	1
S.1580	Clutch shaft keys	2
G.244	Clutch nut	1
S.1436	Clutch nut split pin	1
G.250	Clutch bolts for Springs	4
G.251	Clutch bolt locking wire	1
G.255	Clutch distance pieces	4
G.262	Clutch thrust race	1
G.263	Clutch springs	4
G.286	Air cleaner support bracket	1
G.288	Clutch thrust sleeve	1
G.291	Clutch fulcrum pawl	1
G.292	Clutch fulcrum pawl shim	As reqd.
G.293	Clutch shaft bearing housing	1
S.1266	Clutch shaft bearing housing bolts	2
S.1313	Clutch shaft bearing housing nuts	2
S.1373	Clutch shaft bearing housing spring washers	2
G.294	Clutch shaft oil seal holder gasket	1
G.295	Clutch shaft bearing	1
S.1590	Clutch shaft bearing circlip	1
G.296	Clutch shaft oil seal	1
G.297	Cutch shaft oil seal holder	1
S.1464	Clutch shaft oil seal holder set screws	3
S.1372	Clutch shaft oil seal holder set screws spring washer	3
G.300	Road wheel shaft bearing	1
G.306	Road wheel shaft oilseal	1
G.313	Differential lock block	1
G314	Differential lock ring	1
G.315	Differential lock pin	3
G.316	Differential lock pin spacer	3
G.317	Differential lock ring set screws	3
G.318	Differential lock fork	1
G.319	Differential lock fork trunnion	1
S.1326	Differential lock fork trunnion nuts	2
G.327	Differential lock ring set screw locking wire	1
G.331	Roadwheel shaft	1
G.352	Cluster gears	1
G.353	Layshaft bearing (l.h.)	1
G.354	Layshaft bearing stop	1
S.1223	Layshaft bearing stop screws	3
S.1373	Layshaft bearing stop spring washer	3
G.355	Layshaft bearing stop gasket	1
G.357	Layshaft bearing shim, left	1
G.361	Bevel pinion	1
G.367	Bevel pinion nut	1
S.1424	Bevel pinion nut split pin	1
G.366	Crown wheel	1
S.1535	Crown wheel rivets	6
G.373	Starting dog loose	1
G.374	Starting dog bearing housing	1
S.1233	Starting dog bearing housing set screws	4
S.1374	Starting dog bearing housing spring washers	4

Part No.	Description	No. off
G.400	Road wheel shaft bearing stop, l.h.	1
G.401	Road wheel shaft bearing stop screws, l.h.	4
G.402	Road wheel shaft bearing stop gasket, l.h.	2
G.436	Starting dog bearing circlip	1
G.437	Starting dog and Bearing	1
G.438	Jackshaft	1
G.451	Jackshaft bearing	1
G.461	Jackshaft Oilseal disc	1
G.463	Oilseal disc for Roadwheel	1
G.480	Gear box	1
G.474	Gear box inspection plate gasket	1
G.476	Gear box oil plug and Dipstick	1
G.477	Gear box flange extension	1
S.1461	Gear box flange extension set screws	3
S.1372	Gear box flange extension spring washers	3
G.479	Gear box oil drain plug	1
G.481	Gear change shaft bush	1
G.483	Gear box inspection cover	1
S.1462	Gear box inspection plate set screws	4
S.1372	Gear box inspection plate spring washers	4
G.711	Clutch fulcrum arm key	1

Plate No. 6

Part No.	Description	No. off
G.104	Handle bar pivot block	1
S.1298	Handle bar pivot block bolt	1
S.1326	Handle bar pivot block bolt nut	1
18G.105	Frame assembly 18″ machine	1
20G.105	Frame assembly 20″ machine	1
24G.105	Frame assembly 24″ machine	1
S.1233	Frame to gear box set screws	5
S.1374	Frame to gear box set screws spring washer	5
S.1358	Frame swivel bolt nut	1
S.1432	Frame swivel bolt nut split pin	1
G.121	Handle grips	2
G.122	Handle bars	1
G.123	Handle bar slides	1
S.1273	Handle bar slide bolts	2
S.1314	Handle bar slide nuts	2
S.1374	Handle bar slide spring washer	2
S.1278	Handle bar slide pinching bolts	2
S.1314	Handle bar slide pinching bolts nuts	2
G.152	Rotor and Travel gear control arm	2
G.165	Petrol and Oil tank (with filler caps)	1
G.166	Petrol cock	1
G.167	Oil cock	1
G.171	Petrol and Oil filter	2
S.1405	Petrol and Oil filter fibre washer	2
S.1571	Petrol and Oil filter plug	2
G.173	Petrol supply pipe	1
G.174	Oil tank to Engine pipe	1
G.175	Petrol tank straps	2
S.1312	Petrol tank strap nuts	4
S.1372	Petrol tank strap spring washer	4
G.176	Oil filter to Tank pipe	1
G.177	Engine to Oil filter oil pipe	1
G.183	Air cleaner clamp screw	1
G.188	Exhaust valve lifting hand lever	1

Plate No. 6.

MAIN FRAME, CONTROLS, ROTOR SHIELD and FUEL TANK.

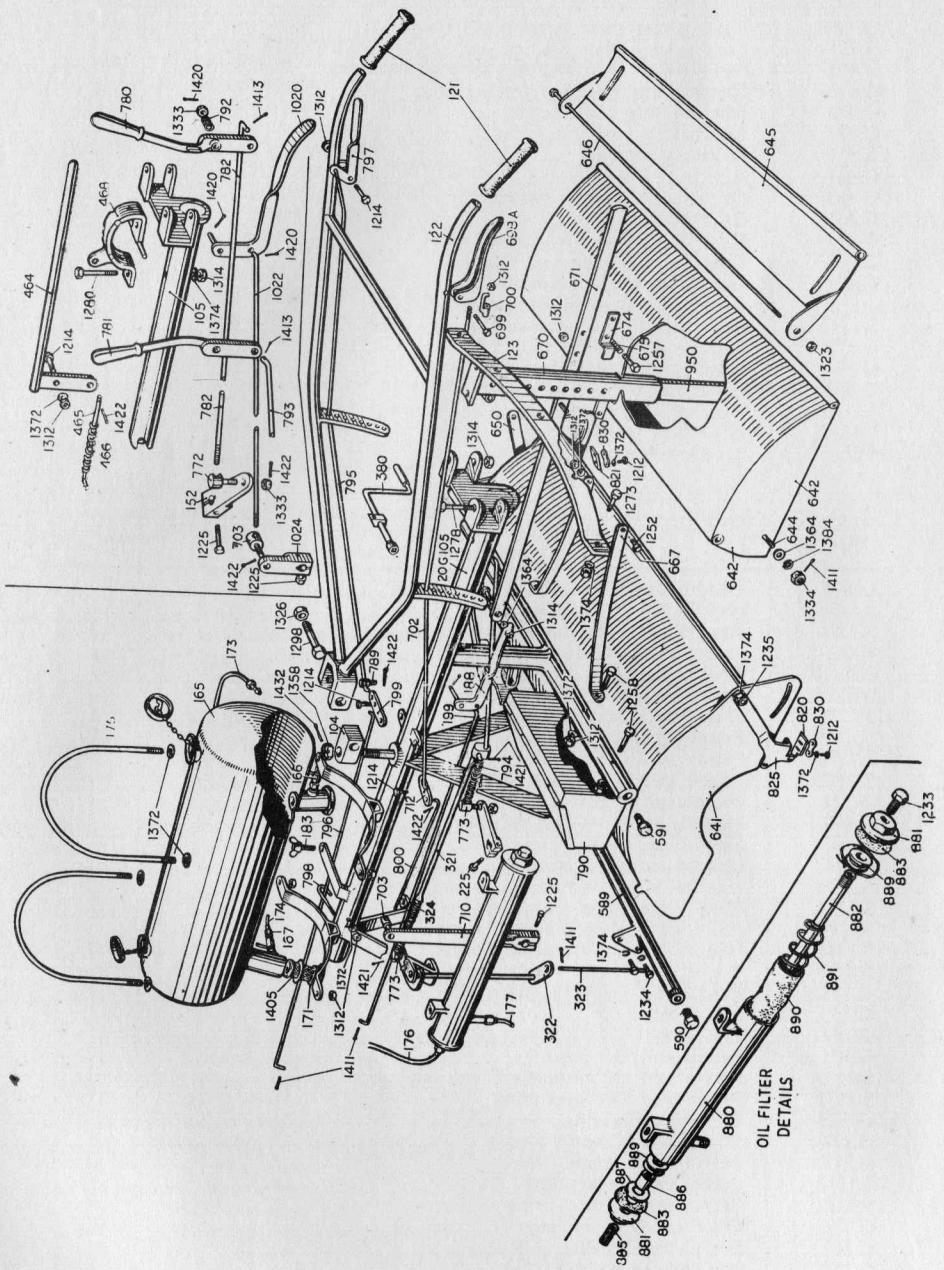

Part No.	Description	No. off
S.1422	Exhaust valve lifting hand lever split pin	1
G.199	Exhaust valve lifting rod	1
S.1411	Exhaust valve lifting rod split pin	1
G.321	Differential control rod	1
S.1333	Differential control rod lock nut	1
S.1421	Differential control rod split pins	2
G.322	Differential selector quadrant	1
G.323	Differential selector quadrant pin	1
S.1411	Differential selector quadrant pin split pin	2
G.324	Differential control rod spring	1
18G.380	Starting handle 18″ machine	1
20G.380	Starting handle 20″ machine	1
24G.380	Starting handle 24″ machine	1
G.464	Handlebar positioning arm	1
S.1214	Handlebar positioning arm set screw	1
S.1312	Handlebar positioning arm nut	1
S.1372	Handlebar positioning arm spring washer	1
G.465	Handlebar positioning pin	1
S.1422	Handlebar positioning pin split pin	1
G.466	Handlebar positioning pin spring	1
G.468	Gear control quadrant	1
S.1280	Gear control quadrant bolts	2
S.1314	Gear control quadrant nuts	2
S.1374	Gear control quadrant spring washers	2
18G.589	Staytube (18″ machine)	1
20G.589	Staytube (20″ machine)	1
24G.589	Staytube (24″ machine)	1
S.1234	Staytube set screws	4
S.1374	Staytube spring washers	4
G.590	Chain box back plate to Staytube set screw...	1
G.591	Frame set screws (countersink head)	3
18G.641	Rotor front shield (18″ machine)	1
20G.641	Rotor front shield (20″ machine)	1
24G.641	Rotor front shield (24″ machine)	1
18G.642	Rotor rear shield (18″ machine)	1
20G.642	Rotor rear shield (20″ machine)	1
24G.642	Rotor rear shield (24″ machine)	1
G.644	Rotor rear shield clamping bolt	2
S.1334	Rotor rear shield clamping bolt nut	1
S.1384	Rotor rear shield clamping bolt thackeray washer	2
S.1411	Rotor rear shield clamping bolt split pin	2
	A Simmonds Locknut (S107/4) has now been substituted for these three parts	
S.1364	Rotor rear shield clamping bolt plain washer	2
18G.645	Rotor rear shield trailing board (18″ machine)	1
20G.645	Rotor rear shield trailing board (20″ machine)	1
24G.645	Rotor rear shield trailing board (24″ machine)	1
S.1323	Rotor rear shield trailing board nut	2
18G.646	Rotor rear shield trailing board hinge bar (18″ machine)	1
20G.646	Rotor rear shield trailing board hinge bar (20″ machine)	1
24G.646	Rotor rear shield trailing board hinge bar (24″ machine)	1
G.667	Rotor depth control socket support to frame	2
S.1258	Rotor depth control socket support to Frame bolts ...	2
S.1312	Rotor depth control socket support to Frame nuts ...	2
S.1372	Rotor depth control socket support to Frame spring washer	2
S.1252	Rotor depth control socket to Support bolt...	1
S.1312	Rotor depth control socket to Support nut	1
S.1372	Rotor depth control socket to Support spring washer ...	1
G.670	Rotor depth control socket	1
G.671	Rotor depth control lever	1
S.1277	Rotor depth control lever hinge bolt	1
S.1314	Rotor depth control lever hinge bolt nut	1

Part No.	Description	No. off
S.1364	Rotor depth control lever hinge bolt washer	2
G.674	Rotor depth control socket clip	1
S.1257	Rotor depth control socket clip bolt	1
S.1312	Rotor depth control socket clip nut	1
G.675	Rotor depth control socket clip spring	1
G.698A	Handlebar clutch hand lever	1
G.699	Handlebar clutch hand lever rivet	1
G.702	Clutch hand lever connecting rod	1
S.1422	Clutch hand lever connecting rod split pin	1
G.703	Clutch trunnion nut	1
S.1422	Clutch trunnion nut split pin	1
G.704	Clutch hand lever adjusting link	1
S.1312	Clutch hand lever adjusting link lock nut	1
G.710	Clutch fulcrum arm	1
S.1225	Clutch fulcrum arm pinching screw	1
G.712	Frame clutch arm	1
S.1214	Frame clutch arm pivot set screw	1
S.1312	Frame clutch arm pivot nut	1
G.772	Travel gear control arm eye bolt	1
	This part has now been provided with two locknuts (S1324)	
S.1333	Travel gear control arm eye bolt nut	1
S.1422	Travel gear control arm eye bolt split pin	1
G.773	Rotor and Differential control arm eye bolt	2
S.1333	Rotor and Differential control arm eye bolt nut	1
S.1422	Rotor and Differential control arm eye bolt split pin ...	1
G.780	Travel gear hand lever	1
G.781	Rotor gear hand lever	1
G.782	Travel gear control rod	1
S.1413	Travel gear control rod split pin	1
G.789	Throttle rod trunnion and Exhaust rod trunnion	2
S.1420	Throttle rod trunnion and Exhaust rod trunnion split pin	1
G.790	Tool box	1
S.1258	Tool box fixing bolt	1
S.1312	Tool box fixing bolt nut	1
S.1372	Tool box fixing bolt spring washer	1
G.792	Rotor and Travel gear hand lever springs	2
S.1333	Rotor and Travel gear hand lever spring nuts	2
S.1420	Rotor and Travel gear hand lever spring split pin	2
G.793	Rotor gear control rod	1
S.1413	Rotor gear control rod split pin	1
G.794	Rotor gear control rod spring	1
G.795	Throttle hand lever to Throttle arm rod	1
S.1411	Throttle hand lever to Throttle arm rod split pin ...	1
G.796	Frame arm to Carburettor rod	1
S.1411	Frame arm to Carburettor split pin rod	2
G.797	Throttle hand control lever	1
S.1214	Throttle hand control lever set screw	1
S.1312	Throttle hand control lever nut	1
G.798	Hook bolt	1
S.1312	Hook bolt nut	1
S.1372	Hook bolt spring washer	1
G.799	Frame throttle arm	1
S.1214	Frame throttle arm pivot set screw	1
S.1312	Frame throttle arm pivot nut	1
G.800	Clutch arm to Frame arm rod	1
S.1422	Clutch arm to Frame arm rod split pin	1
G.820	Weed cutter blade l.h.	1
S.1212	Weed cutter blade l.h. set screws	2
S.1372	Weed cutter blade l.h. spring washers	2
G.821	Weed cutter blade r.h.	1
S.1212	Weed cutter blade r.h. set screws	2

Part No.	Description	No. Off
S.1372	Weed cutter blade r.h. spring washers	2
G.825	Weed cutter bracket	1
G.830	Weed cutter keeper plate	2
G.880	Oil filter tube	1
G.881	Oil filter tube end caps	2
G.882	Oil filter centre tube	1
G.883	Oil filter fibre discs	2
G.885	Oil filter tube nipple	1
G.886	Oil filter connecting union	1
G.887	Oil filter end washers	2
G.889	Oil filter bag securing discs	2
G.890	Oil filter bag	1
G.891	Oil filter bag spiral springs	1
G.892	Oil filter bag binding wire	2
G.950	Rotor depth control skid	1
G.1020	Reversing gear hand operating lever	1
S.1420	Reversing gear hand lever split pin	1
G.1022	Reversing gear connecting rod	1
S.1420	Reversing gear connecting rod split pin	1
G.1024	Reverse gear arm	1
S.1225	Reverse gear arm pinching bolt	1
G.703	Reverse gear arm trunnion nut...	1
S.1422	Reverse gear arm trunnion nut split pin	1

Plate No. 7

Part No.	Description	No. off
G.130	Roadwheels (cleated type)	2
G.141	Wheel hub studs	8
S.1316	Wheel hub stud nuts	8
G.142	Wheel hub springs	8
G.153	Rotor gear selector	1
G.155	Rotor and Travel gear control arm keys	2
G.156	Rotor gear selector block	1
S.1424	Rotor gear selector block split pin	1
G.162	Wheel hub discs	2
S.1286	Starting handle pivot bolt	1
S.1315	Starting handle pivot bolt nut	1
G.381	Starting handle support bracket	1
S.1233	Starting handle support bracket set screw	1
S.1324	Starting handle support bracket spring washer	1
G.439	Rotor sliding dog	1
18G.452/1	Jackshaft extension (18″ machine)	1
20G.452/1	Jackshaft extension (20″ machine)	1
24G.452/1	Jackshaft extension (24″ machine)	1
G.452/2	Jackshaft fixed dog	1
G.452/3	Jackshaft fixed dog rivet	1
18G.453	Jackshaft extension housing (18″ machine)	1
20G.453	Jackshaft extension housing (20″ machine)	1
24G.453	Jackshaft extension housing (24″ machine)	1
S.1528	Jackshaft extension housing rivets	8
G.454	Jackshaft extension housing studs	2
S.1314	Jackshaft extension housing stud nuts	2
S.1374	Jackshaft extension housing stud spring washer	2
S.1234	Jackshaft extension housing set screws	2
S.1374	Jackshaft extension housing set screws spring washers ...	2
G.455	Jackshaft extension nut	1
S.1436	Jackshaft extension nut split pin	1

Plate No. 7. ROTOR CHAIN DRIVE, CHAINCASE, ROTOR and LAND WHEELS.

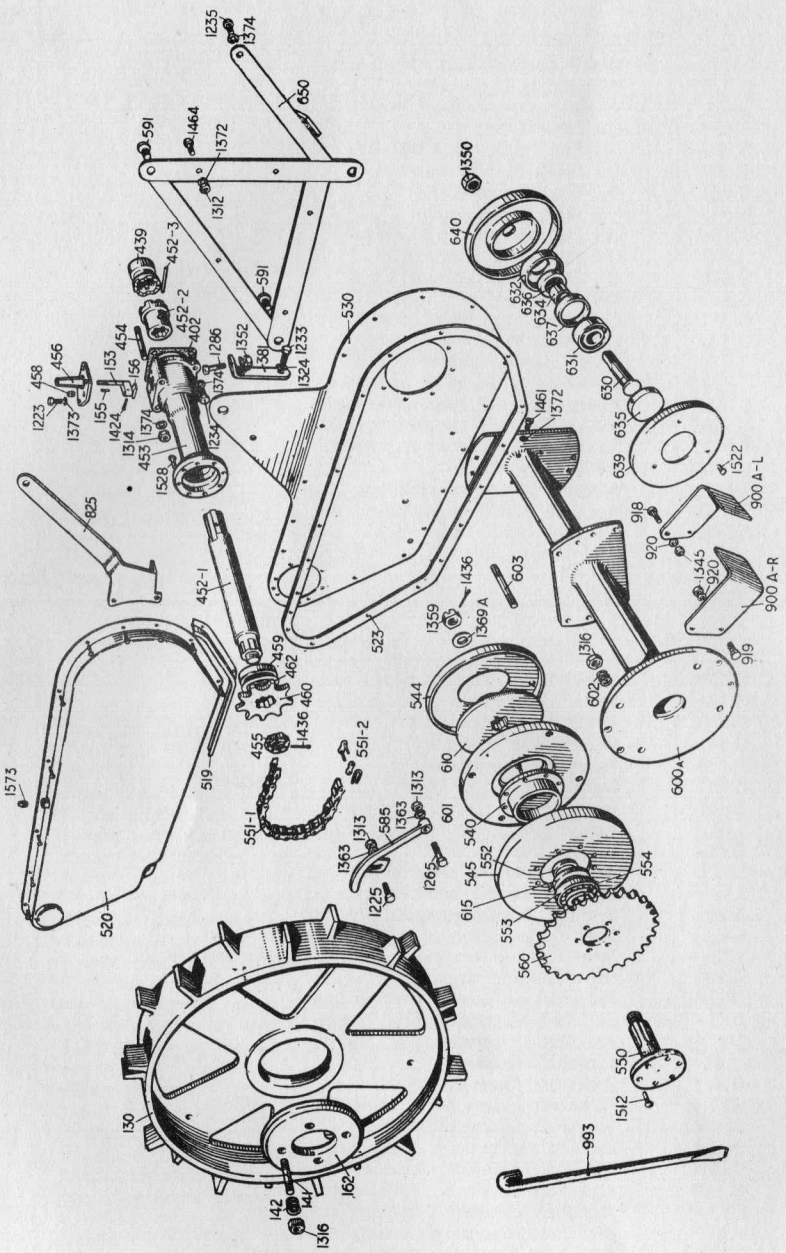

PARTS OF ROTARY HOE

Plate No. 7

Part No.	*Description*	*No. off*
G.456	Dog clutch housing cover	1
G.458	Dog clutch housing oiling plug	1
S.1223	Dog clutch housing cover set screws	3
S.1373	Dog clutch housing cover spring washers	3
G.459	Jackshaft extension bearing	1
G.460	Jackshaft extension sprocket	1
G.462	Jackshaft extension sprocket shim	1
G.519	Chain box wearing shoe	1
G.520	Chain box cover	1
S.1461	Chain box cover set screws (short)	1
S.1462	Chain box cover set screws (standard)	6
S.1463	Chain box cover set screws (long)	2
S.1464	Chain box cover set screws (extra long)	7
S.1214	Chain box cover set screws (hex head)	1
S.1372	Chain box cover set screws spring washers	17
S.1312	Chain box cover set screws nuts	10
S.1573	Chain box oil plug	1
G.523	Chain box cover gasket	1
G.530	Chain box back plate	1
G.540	Rotor bearing housing	1
S.1530	Rotor bearing housing rivets	8
G.545	Rotor bearing dust cover	1
G.544	Rotor drive wear plate	1
G.550	Rotor drive shaft	1
S.1359	Rotor drive shaft nut	1
S.1369A	Rotor drive shaft nut washer	1
S.1436	Rotor drive shaft nut split pin	1
G.560	Rotor drive sprocket	1
S.1512	Rotor drive sprocket rivets	6
G.551/1	Rotor drive chain	1
G551/2	Rotor drive chain connection link	1
G.552	Rotor drive spacing sleeve	1
G.553	Rotor drive shaft bearing	1
G.554	Rotor drive sprocket shim	1
G.585	Chain skid	1
S.1265	Chain skid hinge bolt	1
S.1313	Chain skid hinge nut	1
S.1363	Chain skid hinge washer	1
S.1225	Chain skid locking set screw	1
S.1313	Chain skid locking set screw nut	1
S.1363	Chain skid locking set screw washer	1
G.600A	Rotor	1
S.1461	Rotor oiling screw	1
G.601	Rotor friction drive plate	1
G.602	Rotor friction drive springs	4
G.603	Rotor friction drive studs	4
S.1316	Rotor friction drive stud nuts	4
G.610	Rotor friction drive disc	1
G.615	Rotor drive oil seal	1
G.630	Rotor stub axle	1
S.1350	Rotor stub axle nut	1
G.631	Rotor stub axle bearing	1
G.632	Rotor stub axle bearing cap	1
G.634	Rotor stub axle spacing sleeve	1
G.635	Rotor stub axle back plug	1
G.636	Rotor stub axle oil seal	1
G.637	Rotor stub axle oil seal holder	1
G.639	Rotor stub axle inner dust cover	1
S.1522	Rotor stub axle inner dust cover rivet	3
G.640	Rotor stub axle outer dust cover	1

Plate No. 8. DEPTH CONTROL WHEEL ASSEMBLY, PICK TYNE ROTOR ASSEMBLY, ROAD WHEEL EXT. ASSEMBLY.

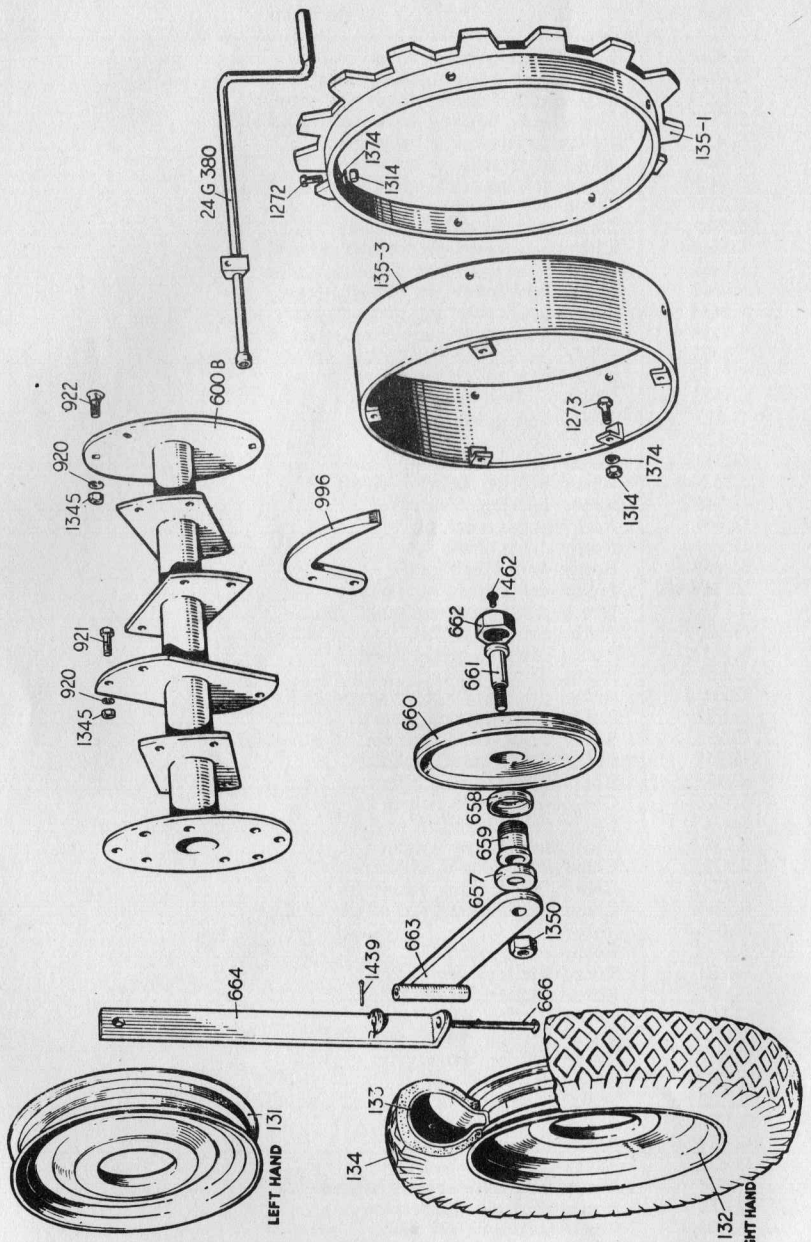

PARTS OF ROTARY HOE

Plate No. 7

Part No.	*Description*	*No. off*
S.1235	Rotor rear shield hinge bolt	2
S.1376	Rotor rear shield hinge bolt spring washer	2
G.650	Rotor bracket right hand	1
S.1464	Rotor bracket right hand set screws	5
S.1312	Rotor bracket right hand nuts	5
S.1372	Rotor bracket right hand spring washers	5
G.900A/L	Rotor hoe blade l.h.	4
G.900A/R	Rotor hoe blade r.h.	4
G.918	Rotor hoe blade bolts (centre flange)	8
G.919	Rotor hoe blade bolts (end flange)	8
S.1345	Rotor hoe blade bolt nuts	16
G.920	Spring washers	16
G.993	Blade setting bar	1

Plate No. 8

Part No.	*Description*	*No. off*
	ROADWHEEL.	
G.131	Roadwheel for rubber tyre l.h.	1
G.132	Roadwheel for rubber tyre r.h.	1
G.133	Roadwheel rubber tyre inner tube	2
G.134	Roadwheel rubber outer cover	2
	ROTOR DEPTH CONTROL WHEEL.	
G.657	Rotor depth control wheel inner dust cover	1
G.658	Rotor depth control wheel outer dust cover	1
G.659	Rotor depth control wheel bush	1
G.660	Rotor depth control wheel	1
G.661	Rotor depth control wheel axle	1
G.662	Rotor depth control wheel cap nut	1
S.1462	Rotor depth control wheel cap nut oiling screw	1
G.663	Rotor depth control arm	1
G.664	Rotor depth control wheel pedestal	1
S.1439	Rotor depth control pedestal spi.. pin	1
G.666	Rotor depth control pedestal pin	1
S.1350	Axle nut	1
	EXTENSION RIM & HANDLE.	
20G.135–1	Road wheel extension flange	2
24G.135–1	Road wheel extension flange	
20G.135–3	Road wheel extension rim	2
24G.135–3	Road wheel extension rim	
24G.380	Starting handle assembly (18″ and 20″ machines)	1
28G.380	Starting handle assembly (24″ machine)	1
S.1272	Road wheel extension flange bolts	10
S.1314	Road wheel extension flange nuts	10
S.1374	Road wheel extension flange spring washer	10
S.1273	Road wheel extension clamping bolts	10
S.1374	Road wheel extension clamping bolt spring washers ...	10
S.1314	Road wheel extension clamping nuts	10

Plate No. 9.

POWER TAKE-OFF & FURROWING ATTACHMENT

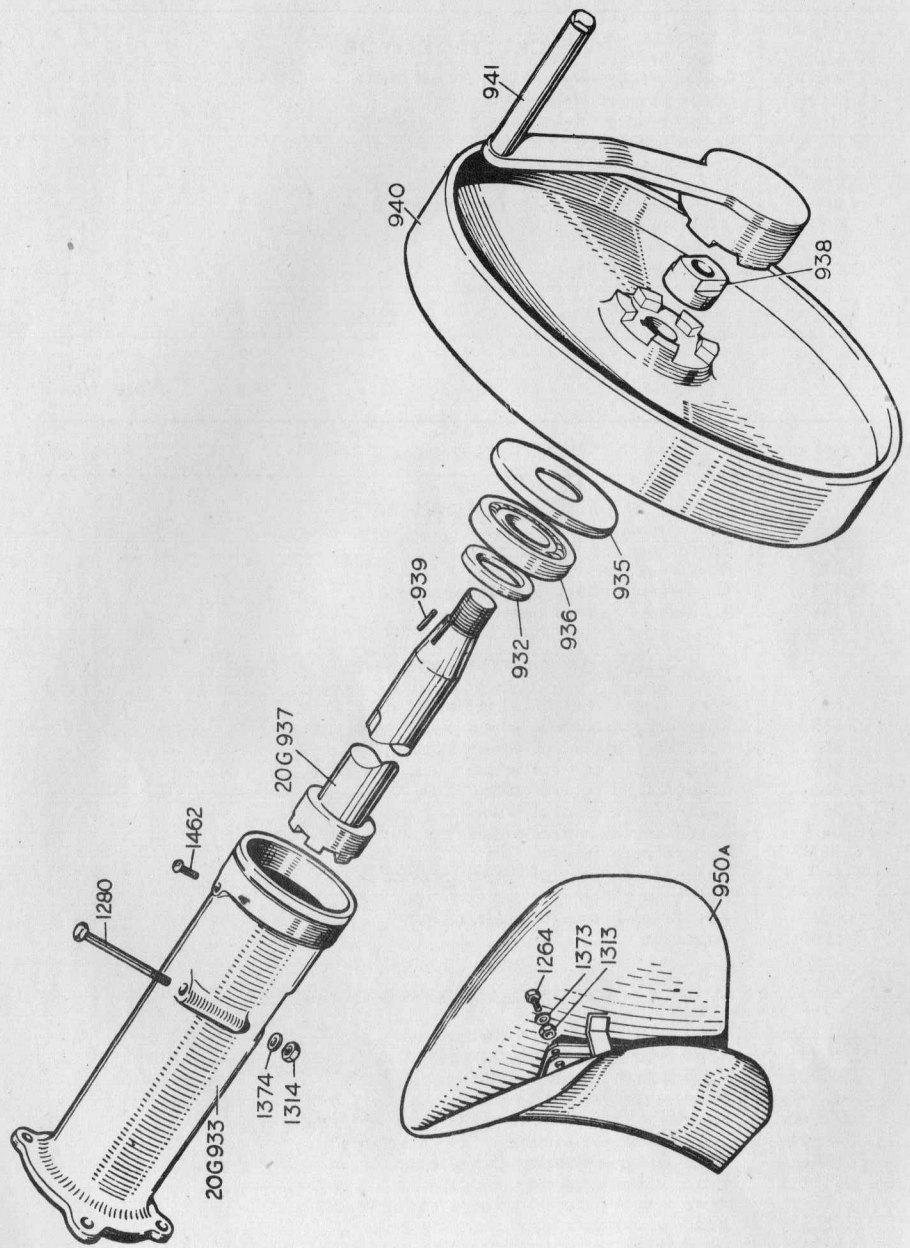

PARTS OF ROTARY HOE

Plate No. 8

Part No.	*Description*	*No. off*
	PICKTYNE ROTOR.	
18G.600B.	Rotor (18″ machine)	1
20G.600B.	Rotor (20″ machine)	1
24G.600B.	Rotor (24″ machine)	
G.921	Picktyne centre flanges bolts	16
G.920	Picktyne bolt spring washer	24
S.1345	Picktyne bolt nuts	24
G.922	End flange bolts	8
G.996	Picktyne	12

Plate No. 9

Part No.	*Description*	*No. off*
	FURROWING ATTACHMENT.	
G.950A	Mould board assembly	1
S.1264	Skid bracket clamping bolt	1
S.1313	Skid clamping bolt nut	1
S.1373	Skid bracket spring washer	1
	FURROW COVERING ATTACHMENT.	
G.951	Furrow covering attachment complete	1
	POWER TAKE OFF.	
G.932	Power take-off thrust collar	1
18G.933	Power take-off housing (18″ machine)	1
20G.933	Power take-off housing (20″ machine)	1
24G.933	Power take-off housing (24″ machine)	1
G.1462	Power take-off housing oil screw	1
S.1280	Power take-off housing bolt	1
S.1374	Power take-off housing spring washer	1
S.1314	Power take-off housing bolt nut	1
G.925	Power take-off bearing dust cover	1
G.936	Power take-off shaft bearing	1
18G.937	Power take-off shaft (18″ machine)	1
20G.937	Power take-off shaft (20″ machine)	1
24G.937	Power take-off shaft (24″ machine)	1
G.938	Power take-off shaft nut	1
G.939	Power take-off shaft key	1
G.940	Power take-off pulley	1
G.941	Power take-off starting handle	1

Plate No. 10. ROLLER ASSEMBLY, SOIL SHREDDER, MACHINE STAND.

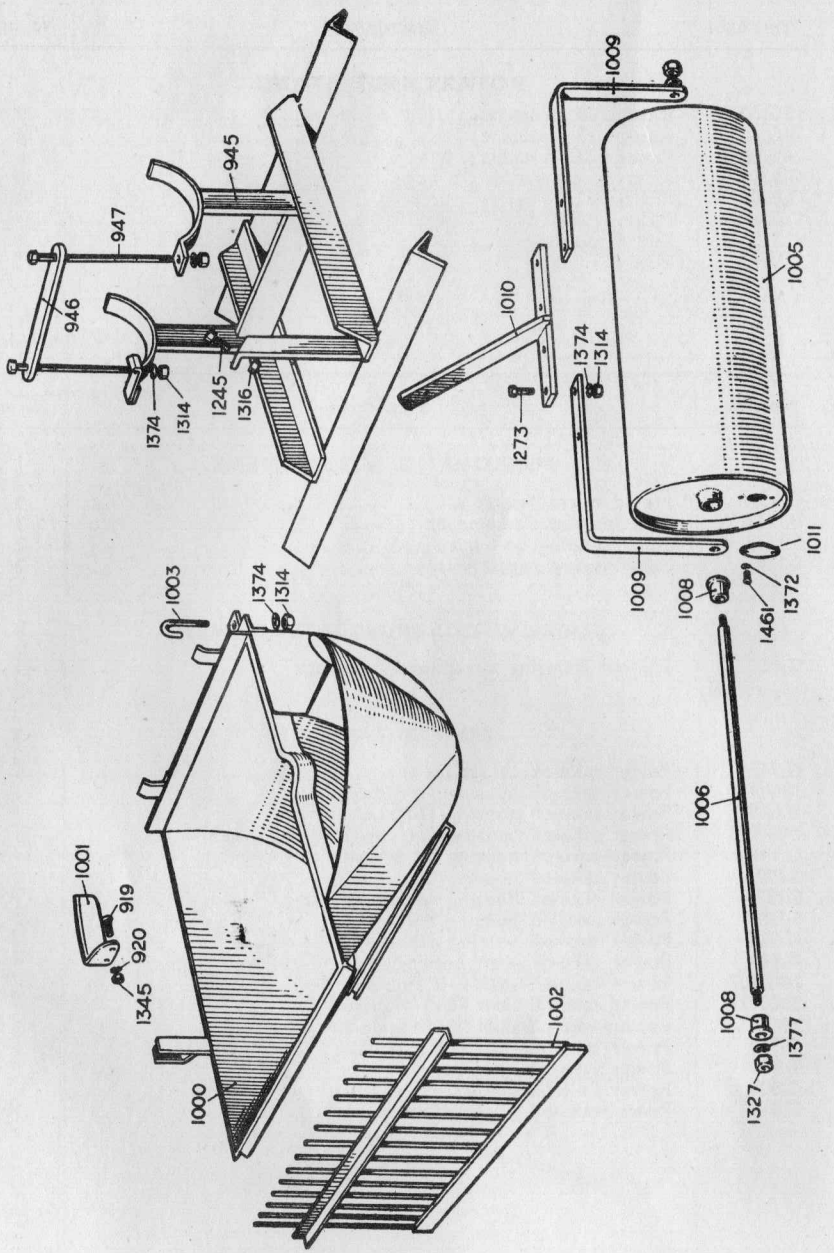

PARTS OF ROTARY HOE

Plate No. 10

Part No.	*Description*	*No. off*
	ROTARY HOE STAND.	
G.945	Machine stand assembly	1
S.1245	Gear box rear support set screw	1
S.1316	Gear box rear support lock nut	1
G.946	Gear box clamping bar	1
G.947	Gear box clamping studs...	2
S.1374	Gear box clamping stud spring washer	2
S.1314	Gear box clamping stud nut	2
	ROLLER.	
18G.1005	Roller drum assembly (18″ machine)	1
20G.1005	Roller drum assembly (20″ machine)	1
24G.1005	Roller drum assembly (24″ machine)	1
18G.1006	Axle (18″ machine)	1
20G.1006	Axle (20″ machine)	1
24G.1006	Axle (24″ machine)	1
S.1327	Axle nut	2
S.1377	Axle nut spring washer	2
G.1008	Axle bush	2
18G.1009	Roller side frame (18″ machine)	2
20G.1009	Roller side frame (20″ machine)	2
24G.1009	Roller side frame (24″ machine)	2
G.1010	Roller pedestal assembly	1
S.1273	Roller pedestal bolts	4
S.1314	Roller pedestal nuts	4
S.1374	Roller pedestal bolt spring washer	4
G.1011	Roller filler plate	1
S.1372	Roller filler plate spring washer	2
S.1461	Roller filler plate set screw	2
G.1012	Grease nipple	2
	SOIL SHREDDER 20″ MACHINE.	
G.919	Feeder blade bolt	4
S.1345	Feeder blade nut	4
G.920	Feeder blade spring washer	4
18G.1000	Soil shredder assembly (18″ machine)	1
20G.1000	Soil shredder assembly (20″ machine)	1
24G.1000	Soil shredder assembly (24″ machine)	1
G.1001	Feeder blade	2
18G.1002	Soil screen (18″ machine)	1
20G.1002	Soil screen (20″ machine)	1
24G.1002	Soil screen (24″ machine)	1
G.1003	Hook bolt	2
S.1314	Hook bolt nut	2
S.1374	Hook bolt spring washer	2

DOUBLE ENDED SET SPANNERS

S 231/7	$\frac{1}{4}'' \times \frac{3}{16}''$
S 231/8	$\frac{3}{8}'' \times \frac{7}{16}''$
S 231/3	$\frac{5}{16}'' \times \frac{3}{8}''$
S 231/5	$\frac{7}{16}'' \times \frac{1}{2}''$
S 231/9	$\frac{5}{8}'' \times \frac{1}{2}''$
S 233	Adjustable spanner

BOX SPANNERS

S 234/1	$\frac{5}{8}''$ single ended
S 235/1	$\frac{5}{16}'' \times \frac{3}{8}''$ double ended
S 236/1	Tommy bar
S 242/1	Combination pliers
S 245	Screwdriver
S 238/2	Feeler gauge .008" and .010"
S 260/2	Oil can

SPARE PARTS

G 919	Rotor blade end flange bolts ...	2 off
S 1345	Rotor blade end flange bolt nuts	2 off
G 900A/R	Rotor blade, **right hand**	1 off
G 900A/L	Rotor blade, **left hand**	1 off
G 551/2	Rotor drive chain connecting link	1 off
G 591	Frame bolt	1 off
	One Blade Setting Bar	

Subject to alteration without notification

OILING CHART

THE INSTRUCTIONS BELOW FOR THE AIR CLEANER AND OIL FILTER SHOULD BE ATTENDED TO MORE FREQUENTLY WHEN WORKING IN DUSTY CONDITIONS. CAREFULLY CHECK ALL OILING POINTS BEFORE USING THE ROTARY HOE AFTER IT HAS BEEN LAID UP FOR ANY LENGTH OF TIME.

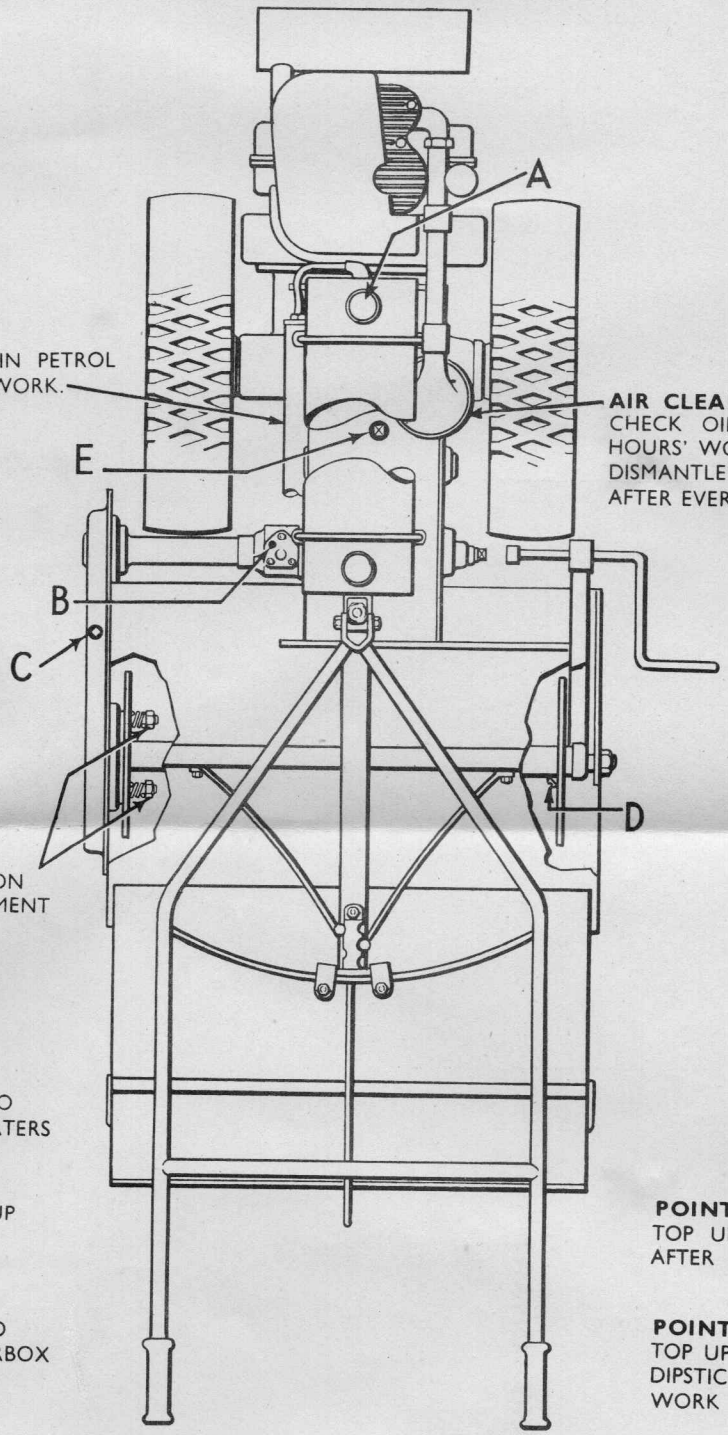

OIL FILTER
DISMANTLE AND CLEAN IN PETROL AFTER EVERY 24 HOURS' WORK.

AIR CLEANER
CHECK OIL LEVEL AFTER EVERY 8 HOURS' WORK.
DISMANTLE AND CLEAN IN PETROL AFTER EVERY 24 HOURS' WORK.

ROTOR FRICTION DRIVE ADJUSTMENT NUTS.

POINT A.
TOP UP AS REQUIRED TO KEEP TANK THREE-QUARTERS FULL OF ENGINE OIL.

POINT B.
ABOUT HALF AN EGG CUP OF ENGINE OIL AFTER EVERY 24 HOURS WORK

POINT C.
MAINTAIN OIL LEVEL TO LOWER MARK ON GEARBOX DIPSTICK. CHECK AFTER EVERY 24 HOURS' WORK. USE GEAR OIL.

POINT D.
TOP UP WITH ENGINE OIL AFTER EVERY 24 HOURS' WORK.

POINT E.
TOP UP TO UPPER MARK ON DIPSTICK AFTER EVERY 24 HOURS' WORK WITH GEAR OIL.

RECOMMENDED LUBRICANTS

Temperature	Wakefield	Shell	Vacuum	Redline	S.A.E. No.
0 — 32° F.	Castrolite	Double Shell	Mobiloil "A"	Super 40	40
32° — 90° F.	Castrol "XL"	Triple Shell	Mobiloil "BB"	Super 50	50
Above 90° F.	Castrol "XL"	Triple Shell	Mobiloil "BB"	Super 50	50
Gear Oil	Castrol "D"	Spirax "C"	Mobiloil "C"	Super 140	140

OILING-CHART FOR ROTARY HOE "GEM"